Mobil units

GeoGo Black A-clean

GeoGo Black A-clean is a mobile filtration unit designed for the effective extraction and filtration of Welding fumes, as well as dust from grinding and manual plasma cutting. The unit has been tested in accordance with W3 and EN ISO 21904-1/2 and is equipped with one or two extraction arms and two high-efficiency cartridge filters, which ensure a filtration efficiency of up to 99% and a clean working environment at multiple workstations operating simultaneously.

The filter unit is fitted with an automatic compressed air cleaning system, which cleans the filter cartridges and ensures a stable extraction capacity as well as a long filter service life. An integrated chamber separates sparks and coarse particles before the air passes through the filters, thereby reducing the load on the filter media. The digital control panel provides a quick overview of operating status, hour meter, alarms, filter status and compressed air supply, whilst the automatic Start/Stop function by using the ground cable of the welding unit contributes to energy-efficient operation.

The GeoGo Black A-clean is not intended for use with oil-laden vapours or in potentially explosive atmospheres. The unit is available with Geovent's WING, ESA or ASA-4 extraction arms (ø160 mm) with a reach of 2 or 3 metres. Available with one or two arms.

Key benefits:

- Suitable for welding, grinding and manual plasma cutting.
- Automatic compressed air cleaning of filter cartridges for stable operation.
- Filtration efficiency of up to 99%
- Integrated pre-chamber for separating sparks and coarse particles.
- Digital control panel with hour meter, alarm log and filter monitoring.
- Automatic Start/Stop function reduces energy consumption.
- Available with WING, ESA or ASA-4 extraction arms.



GeoGo Black A-clean

Ordering table

Unit

Art. No.	Description
15-135	GeoGo Black A-clean with 2 arms and 2 filter cartridges
15-13x	GeoGo Black A-clean with 1 arm and 2 filter cartridges

Arms

Art. No.	Description
01-008G	WING arm 2,0m ø160mm
01-009G	WING arm 3,0m ø160mm
01-650G	ESA arm 2,0m ø160mm
01-651G	ESA arm 3,0m ø160mm
ASA4-2-160-G	ASA-4 arm 2,0m ø160mm
ASA4-3-160-G	ASA-4 arm 3,0m ø160mm
	Adapter for hose, 160 mm

Spare parts

Art. No.	Description
	Filter BIA "M" >99%
	Kit filters A-clean - active carbon

HOVEDGADEN 86 • DK - 8831 LØGSTRUP • Tlf.: (+45) 8664 2211 • E-mail: salg@geovent.dk

GeoGo Black A-clean

Dimensions

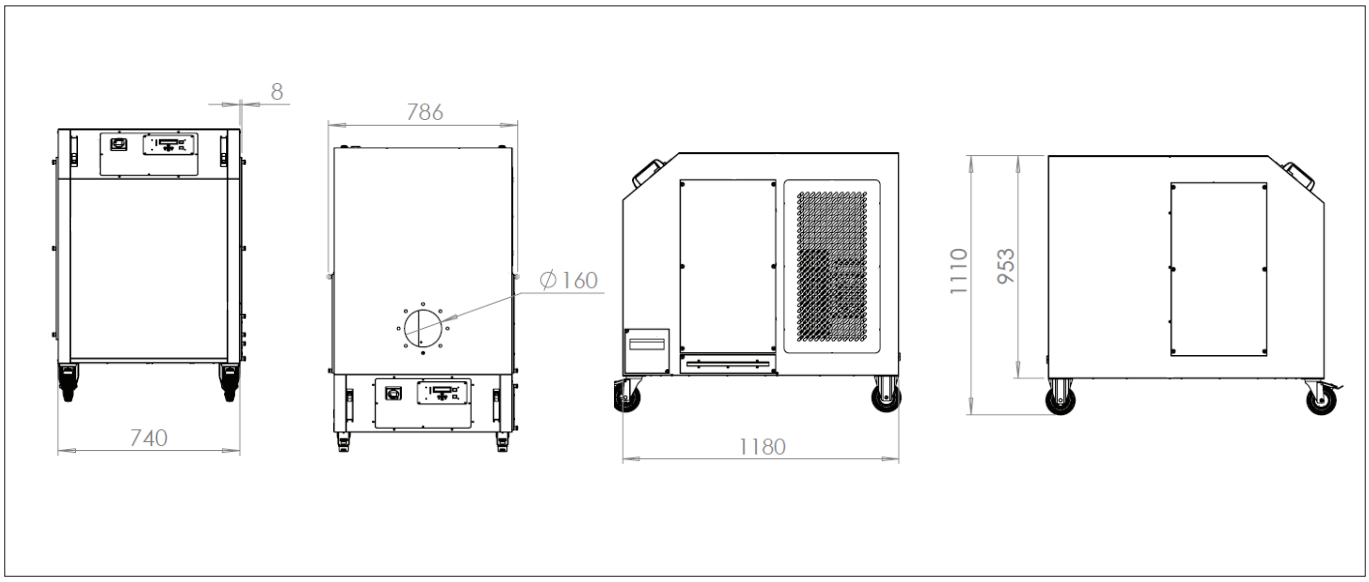

All measurements are in mm

Teknisk data

Fan capacity:	2.520 m³/h
Extraction at hood	appox 2 x 1.100 m³/h
Motor:	1,5kW , 230V/50 Hz
Noise:	75 dB(A)
Weight:	182 kg.

For further information on installation requirements etc., please refer to our instruction manual.

HOVEDGADEN 86 • DK - 8831 LØGSTRUP • Tlf.: (+45) 8664 2211 • E-mail: salg@geovent.dk