GEOVENT

INSTRUCTION MANUAL

FAN

LEX/MEX 250-630

ATEX zone 1 and 2 G, "G" for gas applications
and zone 22 D, "D" for dust applications

Version 2.0 04.02.21

www.geovent.com

Contents

1.0 General safety precautions

IMPORTANT - Please study all the instructions before mounting and commissioning.

This manual is only for valid LEX/MEX fans.

Please keep these instructions in a safe place and instruct all users in the function and operation of the product.

Do not dismantle any factory-mounted parts.

The ATEX data plate may not be removed or covered on the fan.

All electrical installations must be carried out by an authorised electrician.

1.1 Danger

Mechanical assembly should be completed before the fan is connected and put in use.

It is associated with risk if you remove the safety net or otherwise open to the impeller of the fan when it is running.

It is associated with risk of explosion to dismantle kobber-protection on the inlet.

The fan may only be installed, serviced or maintained when it is disconnected and secured against restarting.

Please note that a standard LEX/MEX fan is not to be regulated. Reguulation requires special motors, see 1.5.

1.2 Field of application

The LEX/MEX centrifugal fans are used for both process- og comfort ventilation, where there is an explosion risk from concentrations or dust or gas.

The fan can be used in zone 1 (G), zone 2 (G) og zone 22 (D). Furthermore the fan can be used where the extracted air is itself is of no risk, but where the surroundings demands extra protection, such as gas ships, oilrigs etc.

At highly agressive extractions, the fan should be ordered as AISI 316. Contact your dealer.

1.3 Handling

Always use gloves when handling.
The fan is best lifted with a hand under the motor and one under the house. Should two man handle the fan on must lift one under the motor and the other one must lift under the house. Heavy fans must be handled with lifting gear and use the lifting lug in the motor when you must lift the fan.
Check that the lifting lug is securely fixed before lifting.

1.4 Technical data

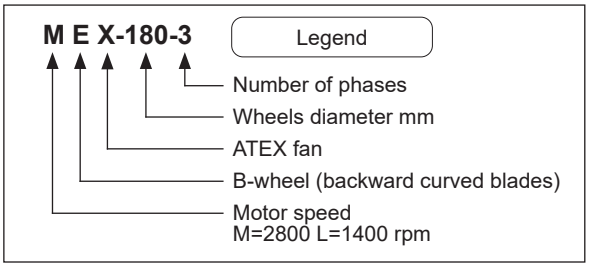

The data plate is placed on top of the fan on the motor side of the fan housing. On the data plate you find contains type and production data.
Motor Size (kW) and ampere consumption can be read on the motor data plate.

The LEX is equivalent to the non-ATEX version (G)LEF.

The MEX is equivalent to the non-ATEX version (G)MEF.

Temperature extracted air	**Max 180°C**
Temperature surroundings	**Max 40°C**

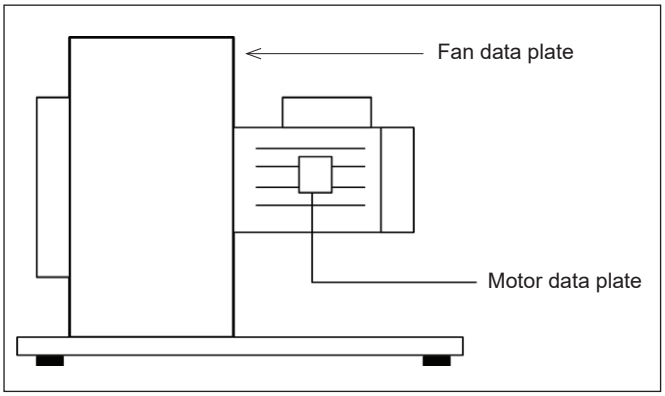

Sound pressure

The sound level for each fan will be show on the pressure curves on the following pages.

The sound level depends on various factors under various circumstances. For instance, where in the room the fan has been installed, the size of the room, the temperature in the room, the sound of the room and also the connection (hose><duct) of the fan influences the sound level of the fan.

As a main rule, a sound box will reduce the actual sound level to only half the level without a sound box.

Pressure drop for fan

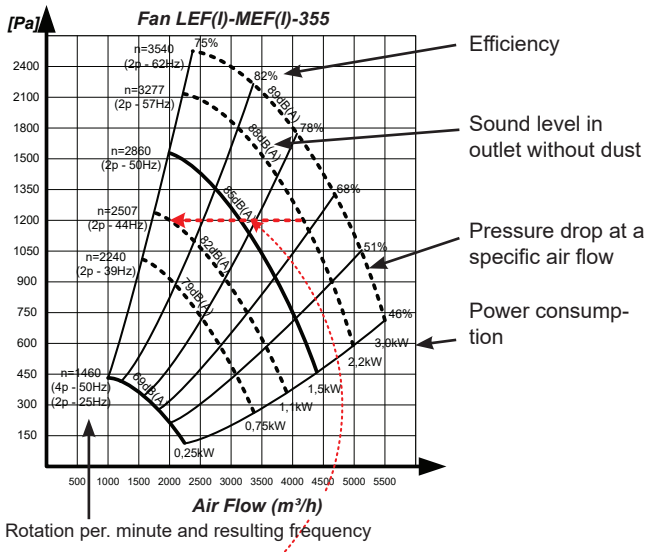

Example: A pressure controlled fan with frequency inverter, is connected to 4 extraction arms. If all arms are in use, is the extracted air flow 4.200 m³/h at 1.200 Pa. If the air flow is reduced to two extraction arms at the same time, the air flow will regulate to 2.000 m³/h and the power consumption will be reduced by 50%.

Dashed line = Requires special adjustable motor fx.:

Ex II 2G Ex de IIC T4

Contact dealer for details

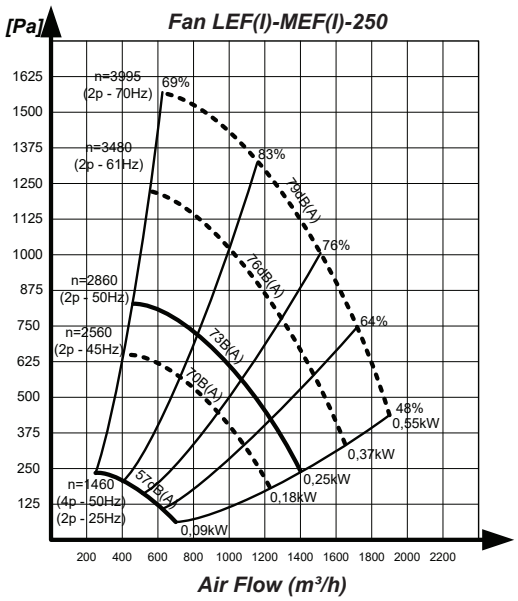

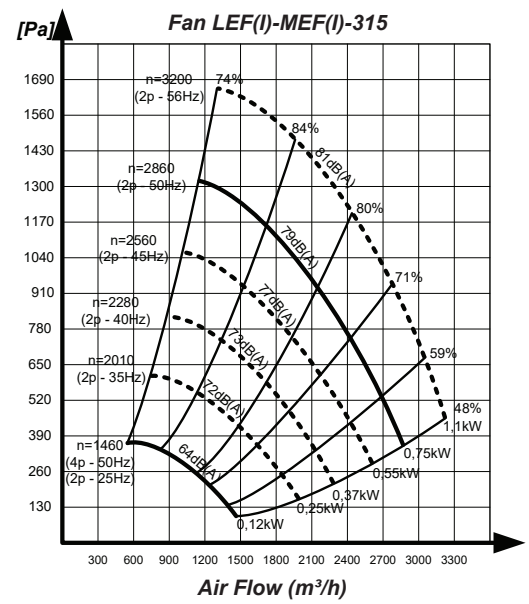

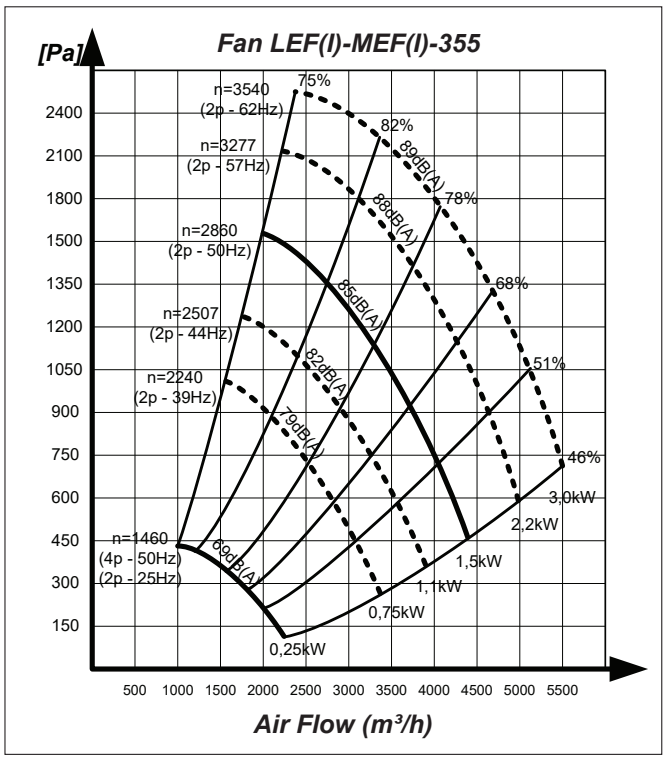
Fan LEF(I)-MEF(I)-355
[Pa]
2400
2100
1800
1500
1350
1200
1050
900
750
600
450
300
150
n=3540
(2p - 62Hz)
n=3277
(2p - 57Hz)
n=2860
(2p - 50Hz)
n=2507
(2p - 44Hz)
n=2240
(2p - 39Hz)
n=1460
(4p - 50Hz)
(2p - 25Hz)
75%
82%
78%
68%
51%
46%
89dB(A)
88dB(A)
85dB(A)
82dB(A)
79dB(A)
69dB(A)
3,0kW
2,2kW
1,5kW
1,1kW
0,75kW
0,25kW
500 1000 1500 2000 2500 3000 3500 4000 4500 5000 5500
Air Flow (m³/h)

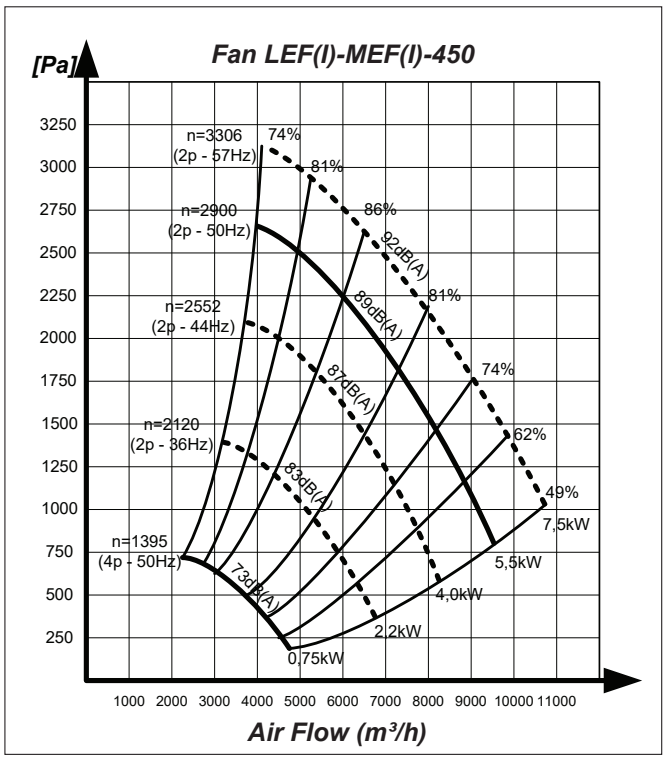
Fan LEF(I)-MEF(I)-450
[Pa]
3250
3000
2750
2500
2250
2000
1750
1500
1250
1000
750
500
250
n=3306
(2p - 57Hz)
n=2900
(2p - 50Hz)
n=2552
(2p - 44Hz)
n=2120
(2p - 36Hz)
n=1395
(4p - 50Hz)
74%
81%
86%
81%
74%
62%
49%
92dB(A)
89dB(A)
87dB(A)
83dB(A)
73dB(A)
7,5kW
5,5kW
4,0kW
2,2kW
0,75kW
1000 2000 3000 4000 5000 6000 7000 8000 9000 10000 11000
Air Flow (m³/h)

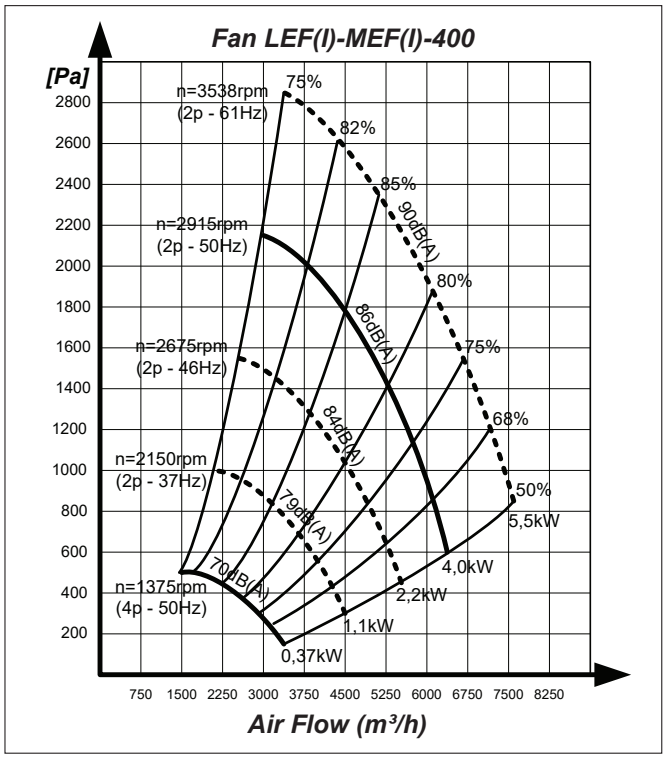
Fan LEF(I)-MEF(I)-400
[Pa]
2800
2600
2400
2200
2000
1800
1600
1400
1200
1000
800
600
400
200
n=3538rpm
(2p - 61Hz)
n=2915rpm
(2p - 50Hz)
n=2675rpm
(2p - 46Hz)
n=2150rpm
(2p - 37Hz)
n=1375rpm
(4p - 50Hz)
75%
82%
85%
80%
75%
68%
50%
90dB(A)
86dB(A)
84dB(A)
79dB(A)
70dB(A)
5,5kW
4,0kW
2,2kW
1,1kW
0,37kW
750 1500 2250 3000 3750 4500 5250 6000 6750 7500 8250
Air Flow (m³/h)

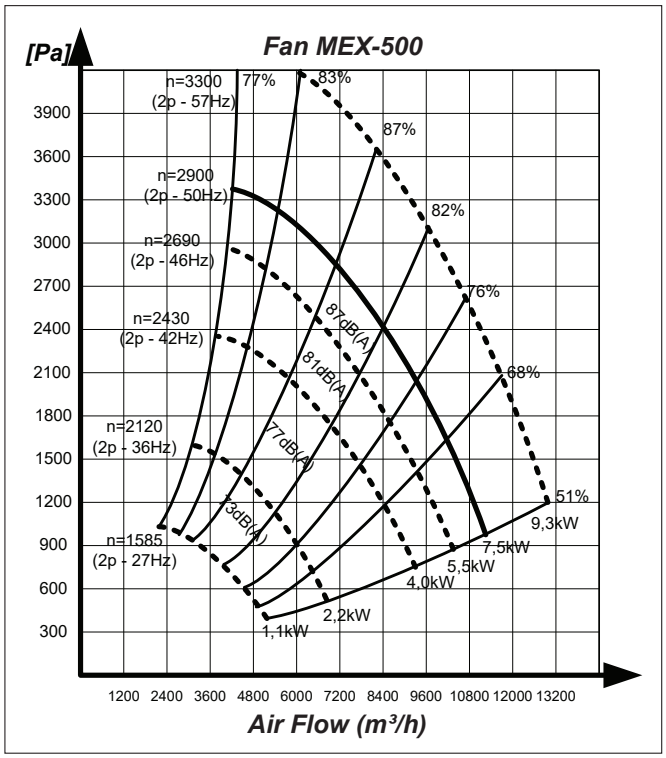
Fan MEX-500
[Pa]
3900
3600
3300
3000
2700
2400
2100
1800
1500
1200
900
600
300
n=3300
(2p - 57Hz)
n=2900
(2p - 50Hz)
n=2690
(2p - 46Hz)
n=2430
(2p - 42Hz)
n=2120
(2p - 36Hz)
n=1585
(2p - 27Hz)
77%
83%
87%
82%
76%
68%
51%
87dB(A)
81dB(A)
77dB(A)
73dB(A)
9,3kW
7,5kW
5,5kW
4,0kW
2,2kW
1,1kW
1200 2400 3600 4800 6000 7200 8400 9600 10800 12000 13200
Air Flow (m³/h)

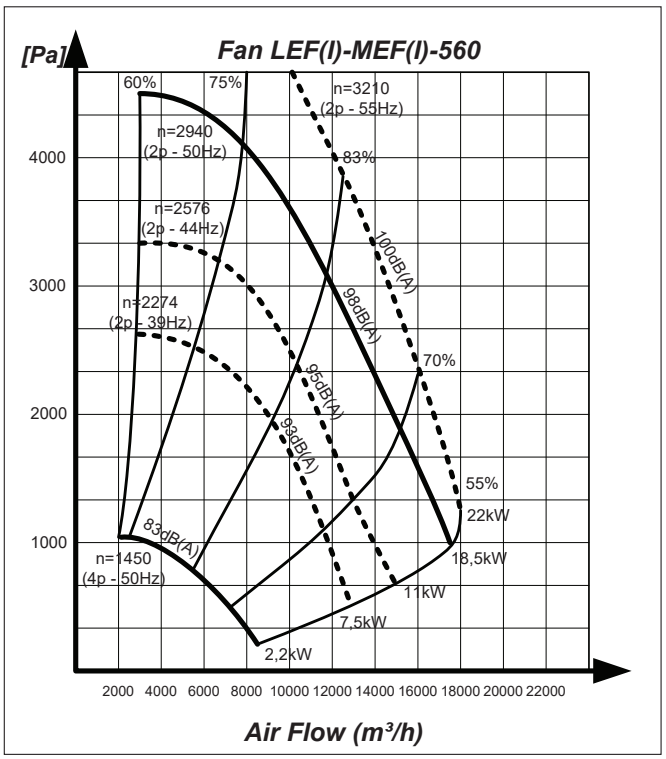

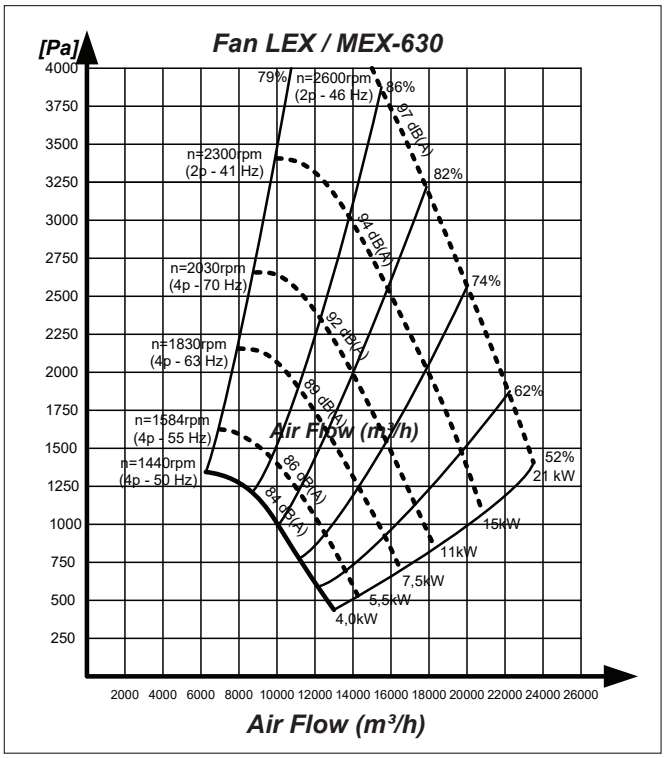

1.5 Construction

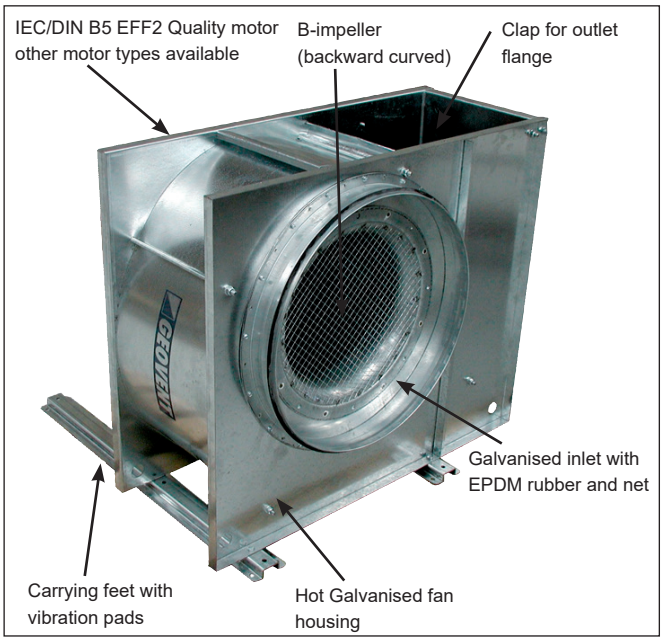

Motor:
As standard for LEX / MEX used three-phase explosion-proof and ATEX certified motors. All motors are with B5 flange. over 3 kW plus foot (B35).

For gas applications zone 1 and 2:
EX II 2G Ex e II T3, CESI 07 ATEX 056X or equivalent, see the manufacturer's manual (attached).

For dust applications zone 22:
For frequency regulated fan (with PTC) in ATEX zone 2-22
ATEX ExnA (II 3G Ex nA IIC T3) zone 2
ATEX A22 (II 3D Ex tc IIIB T120) zone 22
For frequency-regulated fans (with PTC) in ATEX zine 1: for example: EX II 2G Ex de II C T4. Other motor can be ordered.

Fan housing: Made of 0.9-2.0 mm hot galvanized steel FE PO2 G for optimal corrosion resistance. The house is joined together with steel bolts with locking nuts and jointed with 3M Scotch-seal (sealed).
All fans are with carrying feet and mounted with EPDM rubber vibration pads.

Impeller: B-wheel with backward curved in galvanized steel.

Inlet:
The inlet is made of hot galvanized steel and fitted with spark-free copper protective edge. The inlet is provided with a safety net of galvanized mesh. The inlet is provided with EPDM rubber seal (Class C) that connects ordinary spiro ducts.

Expiration:
The outlet is an integral part of the fan housing. The outlet is connected to a square return with galvanized clamps. Galvanized outlet flange (optional) can be mounted end and sealed with 3M Scotch-seal. The fan has stelborbindelse.

Table of dimensions

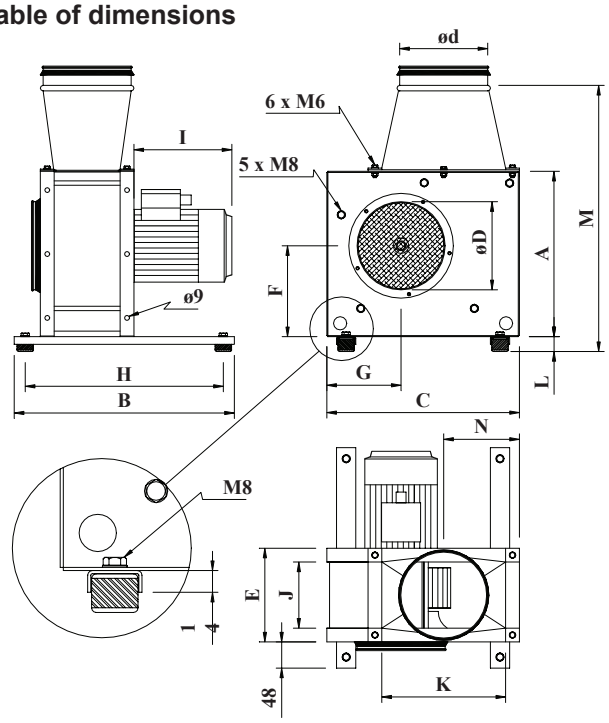

Table af dimensions LEX/MEX 250 - 630 (LEF/MEF)								
Type	**250**	**315**	**355**	**400**	**450**	**500**	**560**	**630**
A	410	510	570	648	715	758	907	989
B	500	700	700	800	800	800	800	800
C	500	600	680	756	850	871	1070	1175
øD	250	315	400	400	500	500	630	630
ød	***	***	***	***	***	***	***	***
E	215	260	284	308	340	345	425	446
F	230	290	329	370	408	421	523	563
G	210	240	272	304	340	362	440	467
H	460	660	660	760	760	760	760	760
I	**	**	**	**	**	**	**	**
J	170	210	234	260	290	295	375	400
K	320	400	450	500	560	510	709	800
M	637	720	797	965	1045	1065	1340	1340
N	185	225	250	275	305	263	380	425
Weight	38*	43*	48*	56*	71*	81*	125*	135*

* The weight will vary and is depending on which size of motor is chosen for the selected fan
** Depends on motor size
*** Depends on selected outlet flange

The table above are the same for fan LEX/MEX 250 - 630.

Note: The data above are valid for standard versions of fans LEX / MEX 250-630. Specifications of any. changes in the booking appears at your invoice.

1.6 Soundbox

Sound box is optional and ordered together with the fan. A sound box can general reduce the noise level. 8–15 Db(A).
Besides soundproffing, the sound box will also protect the fan against wind and weather.

The Soundbox is made of galvanised plate and supplied with 50 mm thick insulating materials (glass wool). Inside the box is lined with a galvanised and perforated steel plate.
The inlet champer in the soundbox....
On the motor side of the box it is provided with an air intake for cooling the motor.

Weights and Measures

Table soundbox 146-630 all measures in mm						
Type	**146/180/200**	**225/250**	**315**	**355/400**	**450/500**	**560/630**
B	518	615	715	873	986	1290
H	592	652	778	915	1046	1277
L	685	784	984	1080	1272	1390
øD	200	250	315	400	500	630
E	330	345	415	485	546	673
P	226	268	298	354	420	525
M	212/262	254	335	308	379	429
J	169/189	205	233	269	318	393
Weight *kg*	34	42	63	81	105	155

OBS: Use gloves when you are handling the soundbox.

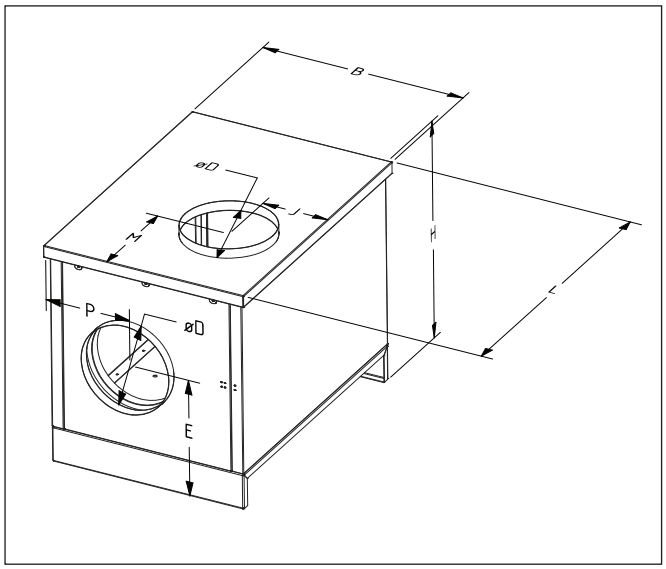

Example

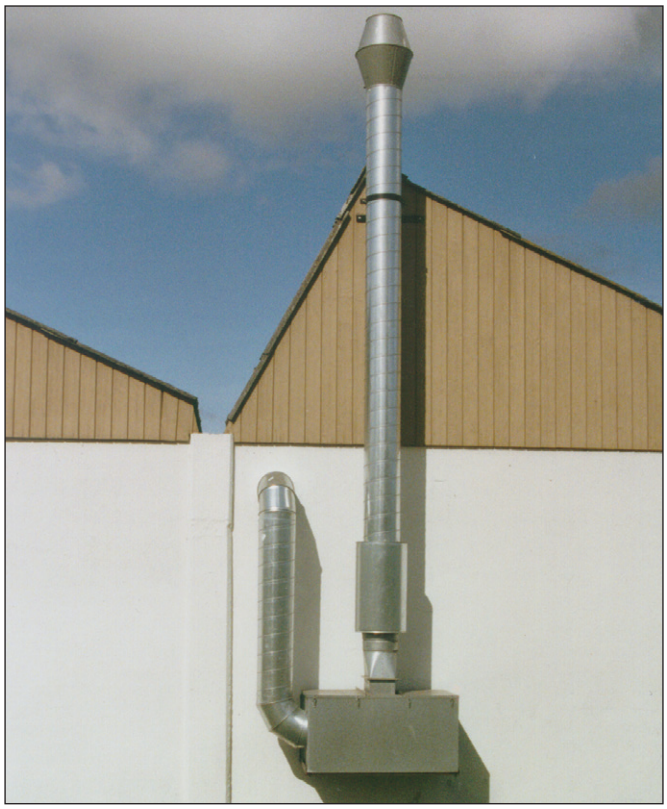

2.0 Installation

The fan is supplied in complete/assembled condition, ready for connection to piping and to the mains.

Before mounting the fan, please make sure that the optimum installation area is selected.

- Is outdoor or indoor installation best?

- Is there space enough for carrying out satisfactory installation/service of the fan?

- What about optimum connection possibilities for piping and automatics?

Important
If at all possible, please avoid bends just before the intake and after the outlet, since otherwise this would reduce the yield of the fan.

For outdoor mounting, any noise nuisances for neighbours should be taken into account and also ensure that the motor is kept out of heavy showers.

Furthermore, drill drainage holes in both motor and fan housing to evacuate condensation.

Figur 1

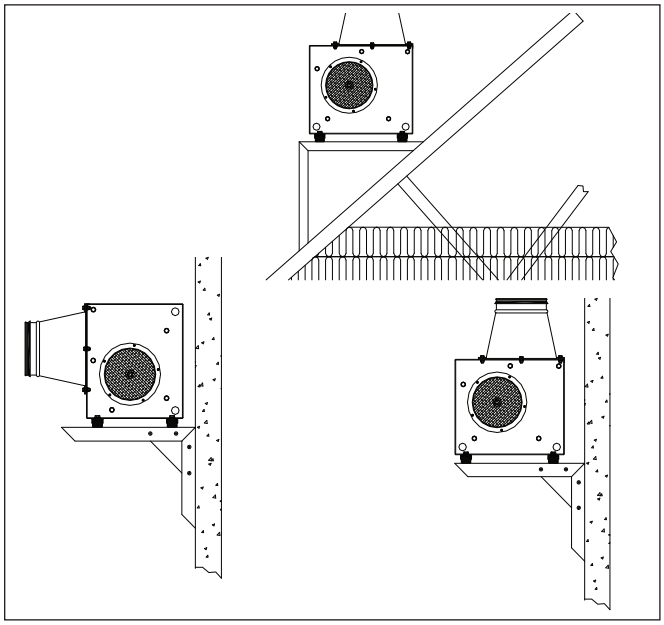

The following installation should only be carried out by a trained fitter

Procedure:

1. The fan is solidly fixed to the roof/floor or to a ceiling bracket or wall bracket (see figure 1). The fan is fixed by attaching the vibration dampers with 4 off M8 bolts. The fan is to be mounted in one of the shown ways. Do not install the fan with the intake in vertical direction.

2. The piping is connected to the fan. On the inlet side, the pipe may be fastened by means of self cutting screws. Remember to seal the connection with filler!

3. On the outlet side, the outlet flange (optional equipment) is attached to the fan by means of the supplied clamps. Remember to seal the connection with filler!

4. The outlet flange is then attached to the piping on the outlet side by means of self-cutting screws. Remember to seal the connection with filler!

5. For outdoor mounting, it is important to protect the fan from heavy rain and to seal the piping against leaks.

2.1 Connection of fan to the mains ”standard motor”

1. The fan should only be connected to the mains by a certified electrician and a motor protection switch should always be used.

2. Our 3-phase motors may be configured to both 3x230V and 3x400V - 50Hz. Is the motor made for another current (see motor signplate) this must be followed. From the factory, the motor has not been configured and the enclosed metal cover plates are to be mounted in such a way in the terminal box that they fit the voltage.

3. Ground connect to the fan housing.

Note: The following wiring diagrams are indicative.

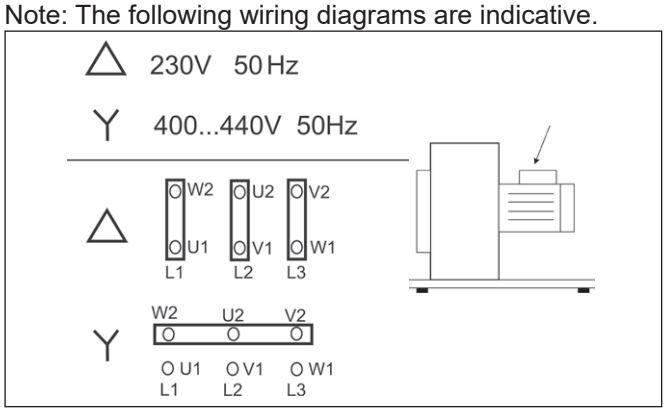

From 4,0 kW motors and up:

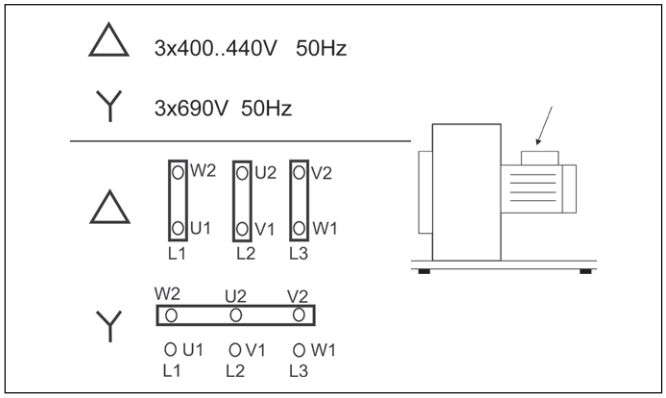

Always double check the metal sign on the motor and on the inner side of the cover for current configurations (diagram).
In rare cases we can supply a 1-phased ATEX motor.

2.2 Installation of optional equipment

Mounting of sound box
From the factory, the fan will be installed in the sound box (optional equipment). The box must be mounted on horizontal surfaces and may only be mounted with vertical outlet.

Connecting the fan to the electricity network - regulated motor

NOTE: REGULATORY NEEDS SPECIAL MOTOR (see 1.5)

Draft of installation with potentionmeter:

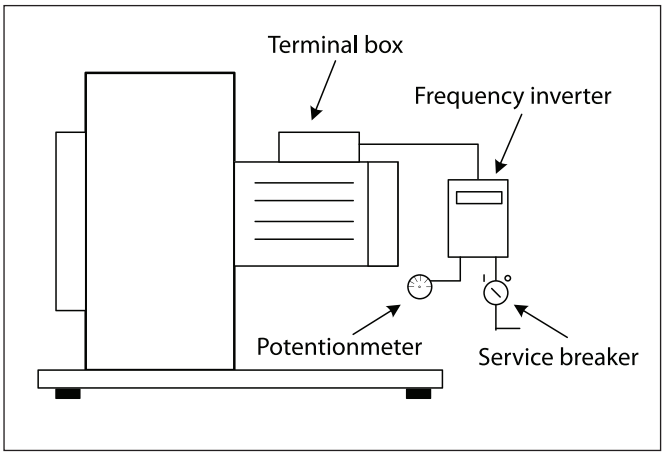

2.3 Trial run – exact adjustment

After the installation has been completed, please check whether there are any vibrations in the fan.

We recommend checking whether the fan supplies the correct volume of air, for which the equipment has been dimensioned. I.e. control the volume of air and make sure that it does not exceed the ampere capacity of the motor.
See also the manufacturer’s manual (attached).

Check that all pipe connections are tight so that gas / dust will stay inside.

3.0 User instruction – application

When extracting large quantities of air, containing dust, the fan wheel may get out of balance due to dirt on the wheel. In order to avoid this, we recommend using a filter.

In many cases, the fan is started by pushing the start button on the motor protection switch (if automatics are not used).

The fan does not work according to the purposes, if …
- unauthorised parts have been mounted on the fan (e.g. unauthorised wheel).
- the wheel runs in the wrong direction. It will still work, but the capacity will be reduced to a third of the normal capacity.
- no motor protection switch is used.

4.0 Maintenance

Periodic maintenance

• The wheel and the fan housing should be cleaned every year or according to requirement. The wheel and the housing may be cleaned by means of a washing-up brush and dishwater. Remember to disconnect the power before the washing and to wipe the parts

afterwards with a dry cloth. This operation results in a longer life of the fan.
- Maintenance of the motor must be checked by the manufacturer's instructions - see attached manual.

Access to the inside of the fan housing and the impeller, can be gained by screwing off the umbracko screws on the back of the fan.
Remember to always cut the power.

At least once annually, the whole point extraction system should be check and serviced by an authorised service-man.

4.1 Trouble-shooting

Remember always to use a motor protection switch!

Always use adjustment damper!

In case of problems with the fan, the following items may be reviewed in order to check whether:
The volume of air or the pressure is below the stated level:
- Wrong direction of operation of the wheel. May be due to wrong electrical installation. Please double-check the direction of rotation. Change two phases, if necessary.
- Leaky channel system.
- Poor inlet/outlet possibilities near the fan may reduce the yield (e.g. 90° bend before the inlet).
- Damaged wheel.
- The rotation speed has been set lower.
- If the temperature deviates substantially from the lab measurements, where the temperature was 20°C with an atmospheric pressure of 101.4 kPa.
- The dampers have not been correctly adjusted.
- The suction net has been blocked by cotton waste, a cloth or the like.

Vibrations and noise

- The base is not even/stable.
- Elements coming from the outside are stuck in the fan.
- Damaged wheel or motor.
- The wheel is loose.
- The wheel may have become unstable, for instance as a result of dirt on the impellers.
- The wheel is rotating in the wrong direction.
- The fan supplies more air than for which the equipment has been dimensioned. Use adjustment damper.
- Loose bolts or screws.

The motor is overloaded

- The cabling of the motor is not correct.
- The shaft has been bent.
- The fan has over-capacity in relation to the resistance in the system. Use adjustment damper.
- The speed of the motor is too high.
- Defective motor – please contact your dealer!
- Water in the motor example leaking gland. Please contact your dealer!

Underpinning

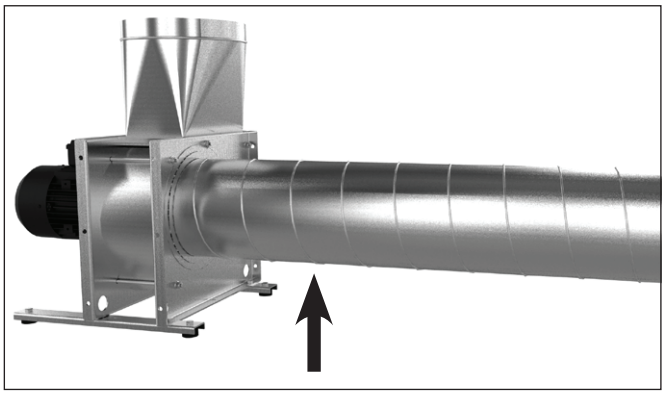

In order to avoid that the inlet twisted and pressed against the impeller must the spiro duct be supported as shown above.

Ground connection

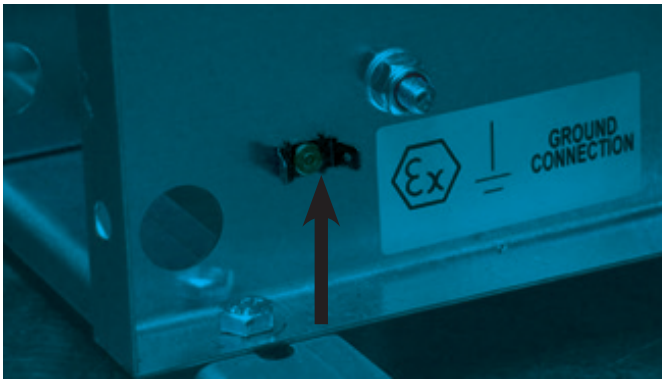

Connect the ground cable to the fan

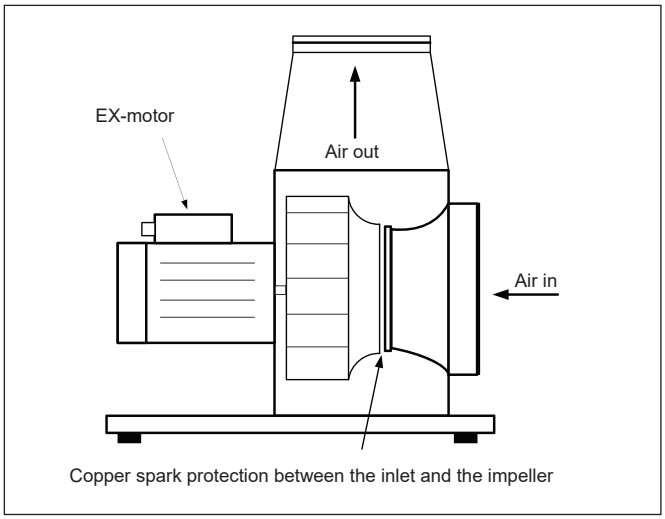

Copper inlet

Example of spark protection on inlet (Copper ring)

5.0 Liability

Warranty
Geovent A/S grants a warranty for products, which are defective, when it can be proved that the defects are due to poor manufacture or materials on the part of Geovent. The warranty comprises remedial action (reparation or exchange) until one year after date of shipment. No claims can be made against Geovent A/S in relation to loss of earnings or consequential loss as a result of defects on products from Geovent.

Wear parts like fan impellers are not included in the warranty.

User liability
In order for Geovent to be capable of granting the declared warranty, the user/fitter must follow this Instruction Manual in all respects.

Under no circumstances may the products be changed in any way, without prior written agreement with Geovent A/S.

ATEX STAMP
with manufactoring data + serial number

6.0 Declaration of conformity

GEOVENT

HOVEDGADEN 86 • DK-8831 LØGSTRUP
(+45) 8664 2211 • salg@geovent.dk

Geovent A/S
hereby declares that:

The products: Fan
Model: LEX/MEX 250-630

have been manufactured in compliance with the directions of the

Directive Council of 2006/42/EF of 17. may 2006 regarding machines.

Directive 2014/34/EU of 26 of February concerning equipment and protective systems intended for use in potentially explosive atmospheres.

The following harmonized standards have been applied:

EN ISO 12100-2011	Safety of machinery – General principles for design – Risk assessment and risk reduction
EN ISO 1127-1:2011	Explosive atmospheres - Explosion prevention and protection - Part 1: Basic concepts and methodology
DS/EN 14986:2017	Design of fans working in potentially explosive atmospheres

The Technical Constrution File is maintained at Geovent A/S.

Authorized to collect the Technical Construction File:

Lise Cramer

Dato: 04.02.21

Position: Director
Name: Thomas Molsen

Underskrift :

CE

GEOVENT

HOVEDGADEN 86 • DK-8831 LØGSTRUP
(+45) 8664 2211 • salg@geovent.dk