GEOVENT

INSTRUCTION MANUAL

GEOFILTER GFX2

GFX2 3-1, GFX2 6-2, GFX2 9-3, GFX2 12-4

For ATEX zones 20, 21 and 22. Zone "D" for dust applications

Version 1.0 22.02.2024

www.geovent.com

Content

1.0 Introduction

This manual is made and designed in order to facilitate the best and most secure interaction with the product. The manual is relevant for people involved in transportation, stocking, installation, using, maintaining and all other thinkable interaction with the product.

The manual must be read in full and understood before interacting with the product.

When the manual has been read and understood in full, the table of contents can be used to find the relevant information in each case.

The product is manufactured by:

Geovent A/S
Hovedgaden 86
DK-8861 Løgstrup
DENMARK

Tel.: (+45) 86 64 22 11
E-mail: salg@geovent.dk
www.geovent.com

This manual is to be used for all interactions with the product including: Transportation, stocking, installation, operation and maintenance.

This product is marked with: (example)

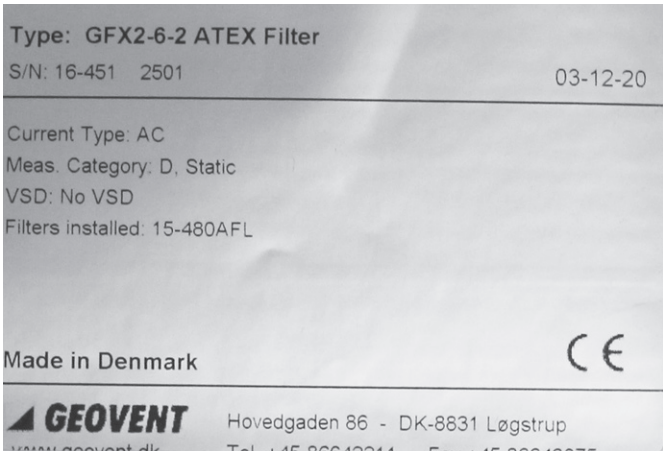

2.0 Safety

2.1 General safety

Carefully read this manual before use and observe the safety instructions in order to avoid injuries!
Keep this manual in a safe place!

Secure that all users of the product have read this manual and that they follow the instructions as described.
Observe all instructions marked on the product!
Observe the indications of the manufacturer.
Never use the product if you are in doubt about how it works or what you should do.
Observe all instructions marked on the product!
Observe the indications of the manufacturer.

When doing maintenance or replacing filter cartridges, follow the instructions in chapter 7.0.

If the instruction manual has been lost, a new one must be obtained without delay.

In case of illegible installation manual or illegible or unclear information and warnings on the product, these must be replaced immediately with new ones.

If an alarm is weak or defective, it must be repaired or replaced immediately. Never use the product with defective signalers.

Wires and pneumatic hoses must be replaced immediately if they are damaged. This replacement shall be carried out by trained and qualified personnel.
Avoid making changes to the product and only use spare parts from Geovent, otherwise, there is a risk of destroying the product and its operation.
All electrical installations must be carried out by a authorized electrician.

2.2 Danger

As the product is ATEX approved, it is designed to best minimize the risk of explosion. To further minimize the risk of explosion, the installation, servicing, and use of the filter is required in accordance with this instruction manual.

It is emphasized once again, that this manual is thoroughly read before installation and use.
It is a danger to life to open, separate, or otherwise handle the product while it is in use.

Before servicing the product, a cleaning cycle must be run and subsequently, the power must be turned off.

Generally, as a rule, the product should always be placed outdoors. If indoor placement is the only option, the limb of the explosion membrane must be placed with a way of connecting into the open air.

If the product is to be used for filtering wood dust, the filter MUST be placed outdoors at least 2,5 m from the nearest building. The explosion membrane must be positioned so that the hatch is opened away from the building in the event of an explosion.

The explosion hatch must not be blocked on the outside and placed in such a way that persons in the vicinity of the product do not suffer any damage in the event of an explosion.

When handling the product, gloves should be used to protect the hands from damage.
Please note that the product may tip when it is moved. The product must be handled carefully, and it must be firmly fixed to a forklift, or other means of transportation when moving it.

Place the product on an even and stable base (e.g., a concrete floor) and secure it. Make sure there is room for maintenance and filter change.
The doors of the product must not be opened during operation.
When replacing the filter cartridge, follow the instructions in Chapter 7.3.

Before starting maintenance work on the product, ensure that the pneumatics of the machine are disconnected and aerated, as well as supply separators for all electrical equipment must be switched off (the voltage disconnected). Switches which are switched off shall be marked with a sign showing contact details and the text **"must not be operated - work is carried out on the facility**."

In the event of a fire or accident:
- Call for help
- Disconnect the power connection
- Follow the normal procedures and local requirements in the event of a fire or accident

In case of problems:
- Disconnect the power connection
- Inspect the product to conclude whether a repair is possible
- If repair is not possible, the product must be scrapped. Follow instructions for scrapping in Chapter 8.0.

3.0 Machine overview

3.1 Description

The GFX2 is a filter unit which is used for different filtration purposes.
The filter cartridge used must be carefully selected to ensure effective filtering.

3.2 Intended use

The product is equipped so that it is ATEX approved.
In the event of an explosion in the filter, the explosion hatch will ensure that the explosion pressure is discharged from the filter and into a secured area.

Thus, the product can be used to filter aluminium, flour, and wood dust as well as other media associated with explosion hazard (zones 20, 21, and 22 (D)).
The filter can of course also be used as a filter for other processes, such as welding fumes that are not associated with the risk of explosion.

Mixing air from different processes is not recommended, as this may increase the risk of explosion.

Remark: If the product is installed in a place defined as ATEX Zone 2, the control panel must be placed outside the zone.

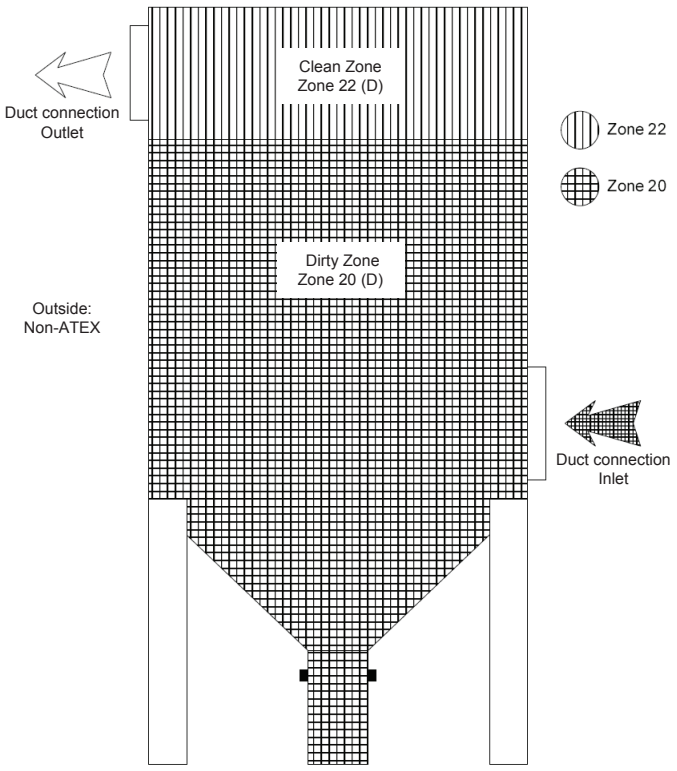

The product comes with filter cartridges of pleated textiles with ALU coating (filtration rate of 99.90% according to DIN EN 60335-2-69:2008) The filter cleaning is automatically done by sending a compressed air shock wave through the filter cartridges, thereby blowing off the particles on the textile material. The particles land in the collection bucket at the bottom.

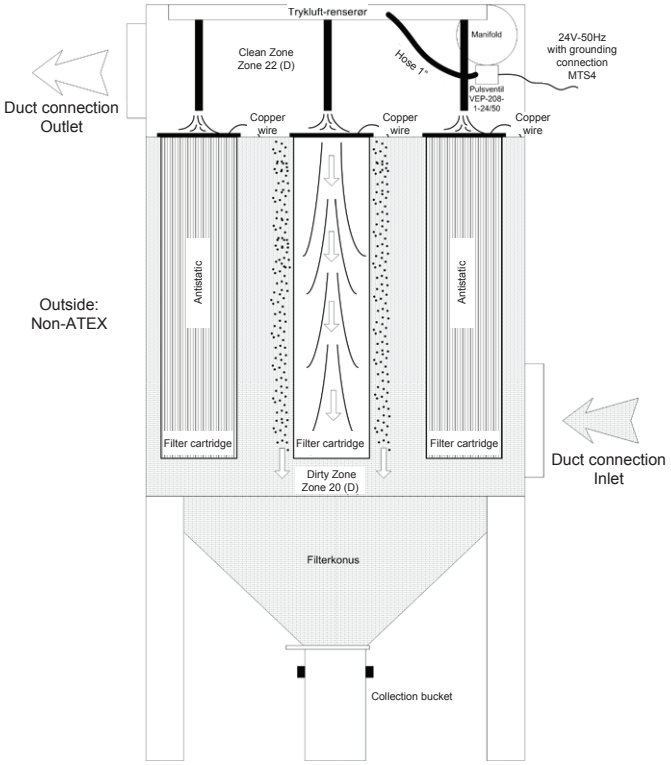

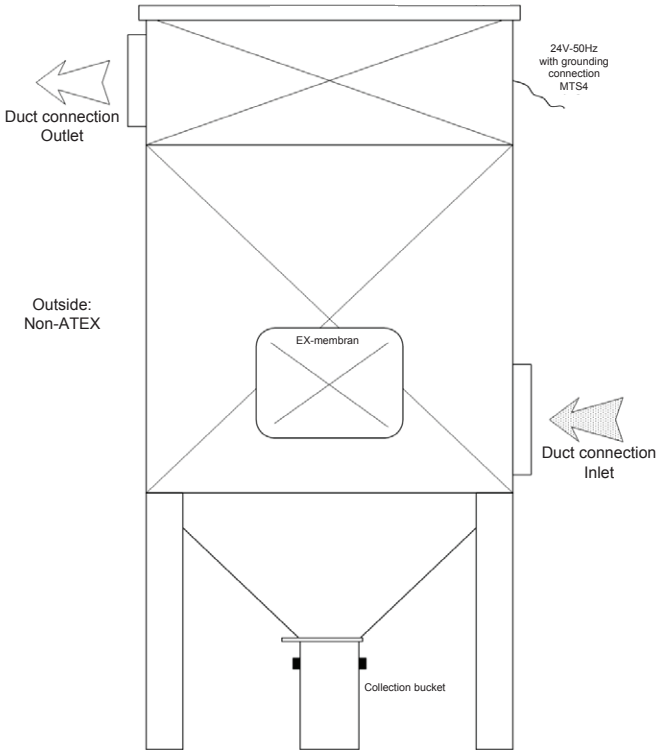

Explosion membrane: Brilex KER, Atex approved, in AISI 304

3.3 Machine specifications

3.3.1 Design

Casing:	Galvanized steel (corrosion category III), with baffle plate in the inlet.
Explosion membrane:	Brilex KER, Atex approved, in AISI 304
Filter cartridges:	See filter table 1.3.
Air pressure tank:	Powder coated steel
Automation:	Filter control with digital display, for shooting time, shot range, and after-run cycle.
Collection bucket:	Galvanized steel – 25 liter capacity.

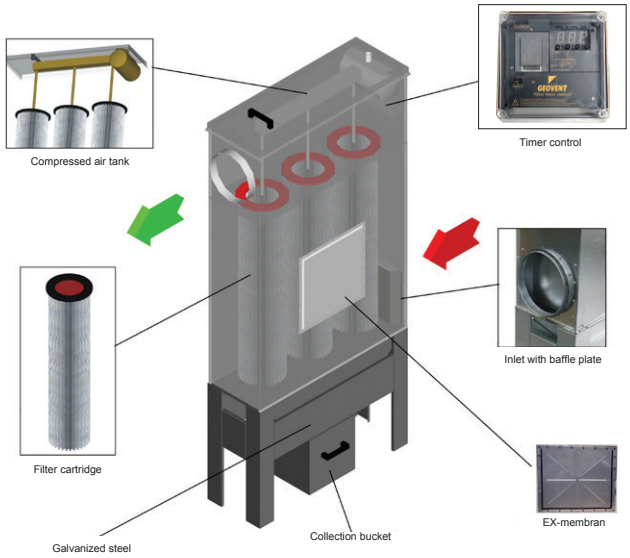

3.3.2 Technical data

Dimensions

Model/Dimension	A [mm]	B [mm]	Inlet
GFX2-3-1	810	635	ø315np
GFX2-6-2	810	635	ø315np
GFX2-9-3	855	935	ø400np
GFX2-12-4	900	935	ø500np

Model/Dimension	Outlet [mm]	Clearance [mm]	Weight [kg]
GFX2-3-1	ø315np	min. 927	110
GFX2-6-2	ø315np	min. 927	135
GFX2-9-3	2xø315np	min. 927	180
GFX2-12-4	3xø315np	min. 927	225

Model	Max. Airflow(*)	Sound pressure level
GFX2-3-1	1,800 m³/h	72 dB(A)
GFX2-6-2	3,600 m³/h	74 dB(A)
GFX2-9-3	5,400 m³/h	78 dB(A)
GFX2-12-4	7,200 m³/h	78 dB(A)

Compressed air:	3.5 - 6 bar - clean and dry air
Air consumption:	3 liters of compressed air per shot
Power supply:	24VDC electricity. 230VAC (standard)
Temperature:	-12°C - +65°C
Corrosion Class:	III
Sealing class.:	Class C

Temperature exhausted air	**Max. 150°C**
Temperature surroundings	**-10°C - +65°C**
Relative humidity must be below	**<90%**

Differential pressure drop

Typical pressure drop: 1000-1500 Pa

Filter types	Filtering	Tested by IFA	Material	
FT/11	99,9% v/0.3my	DIN EN 60335-2-69:2008	Polyester PTFe + aluminium coated	
Coa-ting	Anti-static	Washable	Filter Area	Use
ALU	No	No	10 m²	Allround

The sound level depends on several factors. For example, these circumstances affect the sound level: The location of the product (indoor/outdoor), the size of the room, the temperature of the surroundings, the reverb, and the pressure loss in the filter.

Differential pressure over the product
Typical pressure loss: 1000-1500 Pa

The pressure loss over the filter varies depending on how loaded and dirty the filter media are. When the pressure loss exceeds 2000 Pa. the filter cartridges should be exchanged.

The differential pressure in the filter must NOT exceed 3000 Pa.

4.0 Transport, handling and storage

Approved lifting equipment in the form of a crane, hoist or similar must be used when handling the product or parts of the product weighing more than 50 kg.

During transport in a truck or in another means of transportation the product must be securely packed in a box or a pallet and covered with a water proff material.
The product must be securely stowed in the truck so that it will neither tilt nor shift during transport.

During transport over a short distance e.g. in a stock or a factory, the product can be moved by means of a forklift or a stabeler.

When moved it must be secured that the product does not tilt or shift. And it must be secured that the limitations of the means of transportation is not exceeded.

The product must be placed in a dry place and covered securely, in order to secure that moist, metal parts or other substances do not damage the product.
It is not allowed to place anything on top of the product.

5.0 Assembly, installation and start of operation

5.1 Location

Before installation, the optimal location must be found: Is there enough space to properly install and service the product?
Have the risks of an explosion been taken into account? For example, in which direction the explosion membrane opens. Are there optimal connection options for piping and automation? Place the product on an even and stable base (e.g. a concrete floor) and secure it.

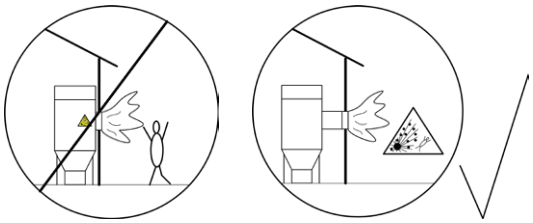

If the filter unit is placed indoors, it must be ensured that any explosion is led out of the building. In this connection, it must be ensured that there are no objects or risks to passers-by who could be injured in the event of an explosion.

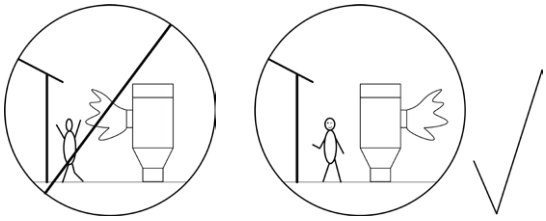

When installing outdoors, take into account possible noise nuisance to neighbors and faults due to frost or driving rain, so a shed should be built around the filter unit to shield it from noise, weather and wind.
Furthermore, the explosion vent should point away from the building and in the direction where passers-by are least likely to pass by. The filter unit must be placed at least 2.5 m from the building.

5.2 Installation

The product is delivered complete and pre-programmed from the factory, ready for connection of pipes and power.

5.2.1 Installing the filter unit

1. Place the product on an even and stable base (e.g., a concrete floor) and secure it. Make sure there is room for maintenance and filter change.

2. The product must be connected to a circular ventilation pipe on both clean and dirty side.
   (The bottom pipe connection is always the dirty side)
   Remember to seal joints with sealant and/or tape!

3. Pipes must be sized so that they can withstand the resulting pressure in the event of an explosion.

4. To ensure free mixing, the return should be carried two meters above the roof ridge of the building towards the atmosphere with a return rate of at least 8 m/s.

5. Connecting the electrical components of the product must be carried out by an authorized electrician.

6. For connecting opportunities: Watch the following drawings and instructions in Chapter 6.0. The electrical installations on the machine must be carried out according to DS/EN 60204-1 ”Electrical equipment on machinery.

7. The packaging shall be sorted and disposed of according to local rules and guidelines.

8. Equalizing connections must be fitted between all interfaces and metallic parts to prevent uncontrollable discharge of static electricity.

IMPORTANT:
Cleaning pressure is adjusted from 3.5 to 6 bar of clean dry air as needed. If the cleaning pressure increases to more than 6 bar there is a risk of damaging the filter media.

In Denmark, all air extraction systems must be equipped with a control device to check the correct suction according to the Danish Working Environment Authority. Check more about Geovent Airbox for this purpose.

5.2.2 Installation of burst sensor

The burst sensor is installed with the metal housing with the help of the two nuts into the mobile part (frame) of the bursting pane.

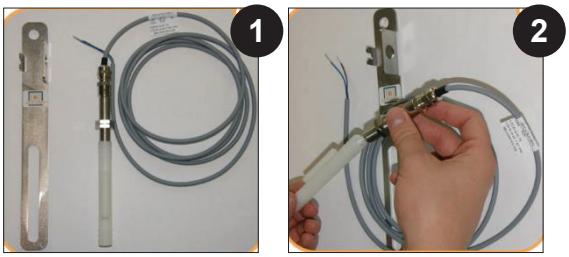

1. Unpack the burst sensor.
2. Remove protective cap.

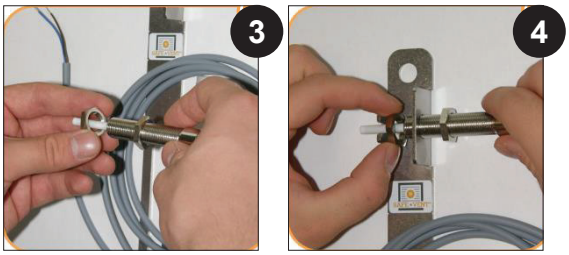

3. Remove the outer nut
4. Install burst sensor on the bracket

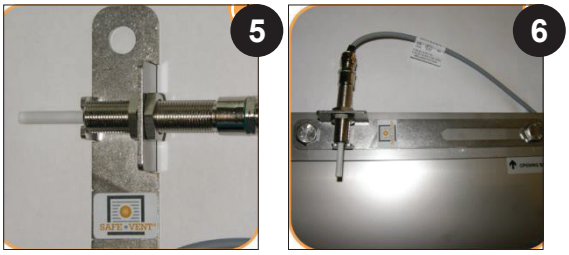

5. Tighten the nuts The starting of max. 10Nm may not be exceeded by fastening the burst-sensor!
6. Attach the bracket on the explosion vent panel. When mounting the sensor you must make sure that the PTFE-ampoule will be destroyed safely on releasing the bursting pane.

Attention: The protection cap is only for transport security and has to be removed carefully by left-hand rotation on installation at the latest.

5.3. Control and test of the security system

When the product is installed you must secure:
a. That the filter is placed on a solid, flat foundation and anchored to the ground or the wall so that it cannot tilt.
b. That the doors of the product are securely closed.
c. Check if the alarm is weak or defect. In that case it must be repaired or exchanged immediately.

6.0 Usage

6.1 Use of the product

The product comes standard with a timer control panel, but in certain situations, it may be advantageous to let the cleaning function control the pressure differential in the filter. In this way, cleaning the filter will automatically begin when the pressure loss over the filter reaches a set point.

> Be aware that the product is supplied with timer control or differential pressure control.

Menu

How to access programming
Press SET
Press + and - to select the required function.
Press OK to confirm.

Increase or decrease the value of the parameter
Press OK to confirm and exit.
Press SET again to exit programming mode.

Display

The display shows Off if terminals 14 and 15 are broken.
The display shows -0- if terminals 14 and 15 are closed but 12 and 13 are broken (fan switch)

Cleaning function

The Cleaning function is programmable.The shock wave and timer control can be set in the function menu.

The shock wave should be adjusted for the current application. From factory, it is set to shoot every 350 seconds. The timer setting may be changed in F3.

Cleaning function with off fan

The function allows one or more cleaning sequences (the number selected in F13), when the fan is turned off.

The cleaning time is always as selected in F02, while the pause time is selected in F14.
The display alternately shows the number of seconds to cleaning and the code ”PCC”.

List of Functions

F02: Activation time.
Possible values: 0.5 - 5.00. Step 0.01
Default = 0.20

F03: Pause time, cetween shots:
Possible values: 001 - 999. Step 1
Default = 175

F04: Number of valves.
Possible values: 01 - 16
Default = Automatic

F05: Output voltage.
Possible values: d24 / a24 /115 / 230.
Default = a24

F06: Manual cleaning cycle.
Possible values: The number of valves set in F4
Press SET to activate.

F13: Cleaning cycles after fan stop.
Possible values: 01 - 99. Step 1
Default = 01

F14: Pause time between cleaning cycles after fan stop.
Possible values: 001 - 999. Step 1
Default = 20

F15: Service timer.
Possible values: 001 - 999. Step 1 (1=10 h)
Default = 100 (1000 h)

F16: Service alarms.
Possible values: 0 (off) -1 (on).
Default = 0 (off)

F17: Reset service timer.
Possible values: 0 (off) -1 (reset).
Default = 0 (off)

Note: The service timer will be reset and the F17 will be reset to 0 by setting F17 to 1.

Alarms:
The unit runs a number af checks during the start-up cycle and during normal operation.
The possible alarms and respective solutions are shown in the following table.

Alarm	Description	Action
E01	F05 set to 24Vdc - ac jumper detected.	**24Vdc**, switch the device off and move the ac/dc jumpers to dc. **24Vac,** Press OK, then press SET, set the function F05 using +/-, select A24 and press OK to confirm.
E02	F05 set to 24Vac - dc jumper detected.	**24Vac,** switch the device off and move the ac/dc jumpers to ac. **24Vdc,** Press OK, then press SET, set the function F05 using +/-, select d24 and press OK to confirm.
E03	F05 set to 24Vac or 24dc. Voltage out of range detected.	**24V valves,** switch the device off and move the output voltage selection jumper to 24V. **If the jumper is in the correct position**, press OK then SET, select the F05 function with +/- set the correct current and press OK.
E04	F05 set to 115V or dc. Voltage out of range detected.	**115V valves,** switch the device off and move the output voltage selection jumper to 115V. **If the jumper is in the correct position,** press OK then SET, select the F05 function with +/- set the correct current and press OK.
E05	F05 set to 230 V. Voltage out of range detected.	**230V valves,** switch the device off and move the output voltage selection jumper to 230V. **If the jumper is in the correct position,** press OK then SET, select the F05 function with +/- set the correct current and press OK.
E06	The current of the solenoid valve is lower than the minimum threshold or disconnected solenoid valve.	Check that the solenoid valve is connected correctly and the respective data. The alarm is self-reset.
E07	The current of the solenoid valve is higher than the maximum threshold.	Check that the solenoid valve is connected correctly and the respective data. The alarm is self-reset.
E08	Output short circuit. **Alarm cannot be reset**	Switch the filter off, check the solenoid valve, and switch the filter back on.
E11	Maintenance deadline reached.	Carry out maintenance.

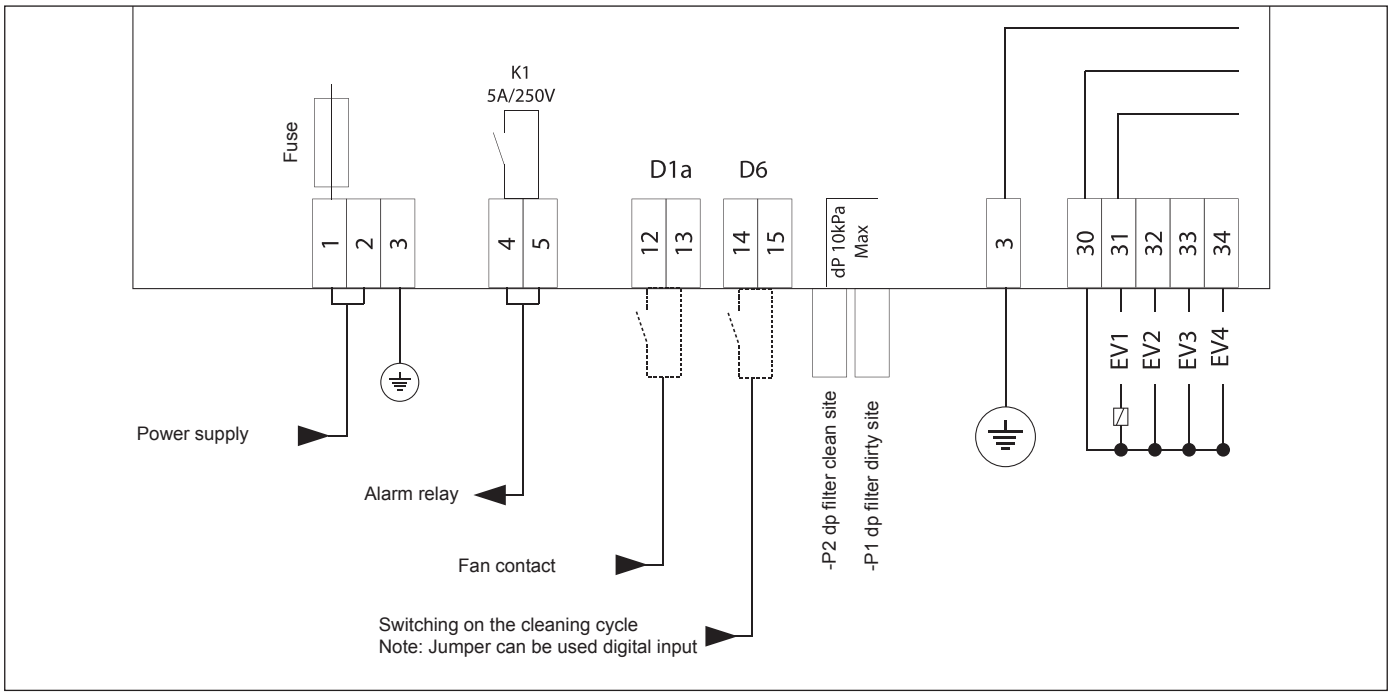

Connections diagram

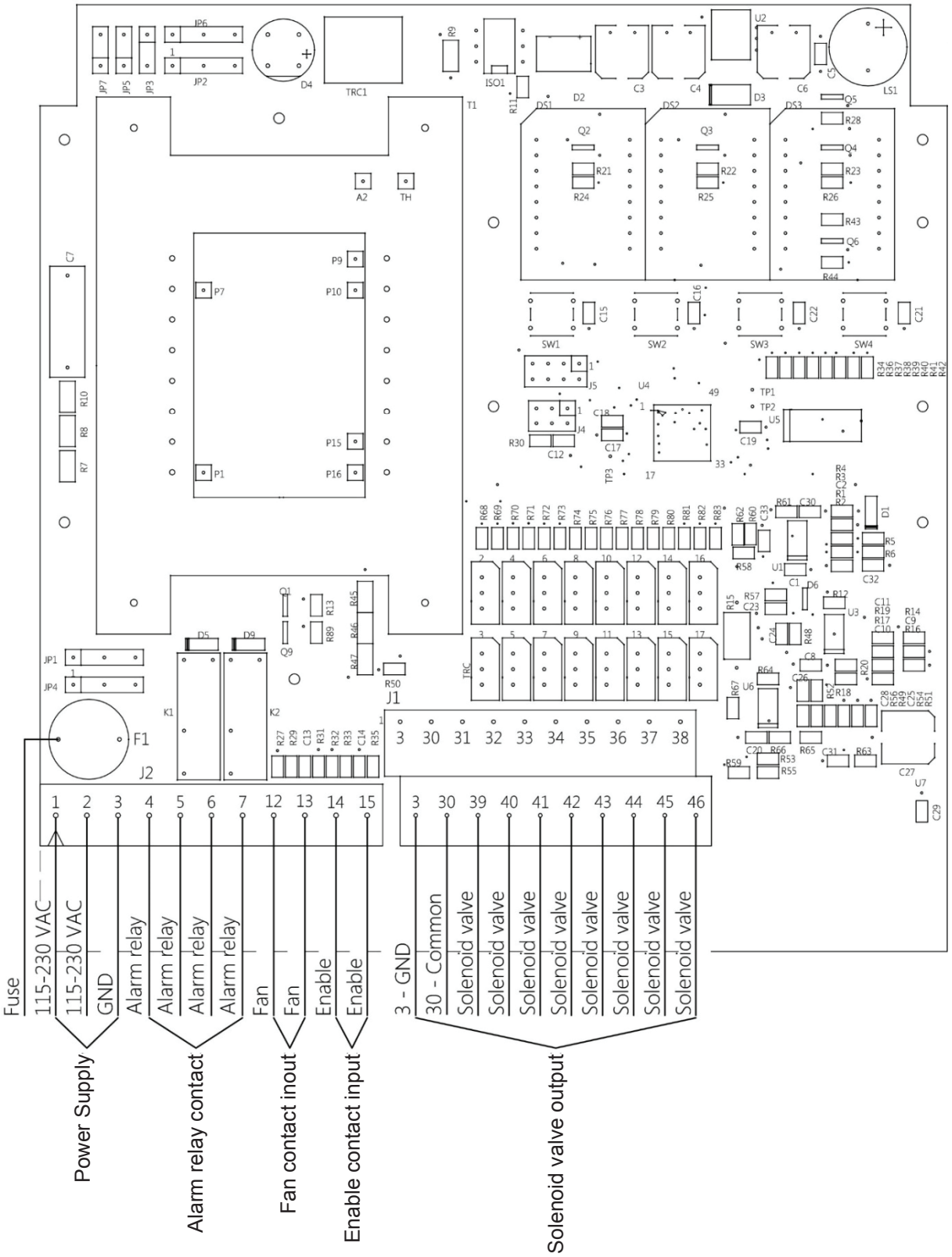

Supply voltage:	230V AC
Alarm relay:	No (Max 3A@250V AC)
Fan input:	Open = Fan off
	Closed = Fan on
Enable Cleaning:	Open = Cleaning disabled
	Closed = Cleaning enabled

Differential pressure control (OPTION)

- **In automatic mode (F01=1)**
  dp value alternating with **OFF** if the enabling switch (14-15) is off.
  dp value alternating with **-0-** if the enabling switch (14-15) is on but 12 and 13 are off.
  dp valve only if the fan is on and active.

- **I manual mode (F01=0)**
  OFF if the enabling switch is off (14-15)
  -0- if the enabling switch (14-15) is on and the fan is off

Manual operating mode F01=0

The economiser will work as a programmable cycle sequencer in manual mode. The connected outputs will be activated at the programmable frequencies. Manual mode can be activated by accessing the configuration menu and setting F01 to 0. F02 and F03 will set the activation time and the pause time, respectively.

Automatic operating mode F01=1 (Standard)

By selecting automatic mode (F01=1), the economieser will work autonomoulsy and carry out the pneumatic washing cycle only when needed. The device will start the washing cycle if the obstruction is higher than Threshold_DP_Start (F08). Washing is suspended when obstruction drops under Threshold_DP_Stop (F09) level until it reaches a value higher than the Threshold_DP_Start threshold once again. When washing is active, the economiser respects the times set in F02 (operating time) and F03 (pause time).

Automatic mode with forced cycle F01=2

Identical to the automatic mode, except for the fact that it is possible to obtain a cleaning cycle with the activation of the solenoid valves connected without reaching the Threshold_DP_Start (F08). The forced cleaning interval may range from 1 to 999 h and can be selected through function F22.

Proportional mode F01=3

With the proportional mode, the economiser will work in full autonomy, initially setting the DP_Start threshold (F08), activation time (F02) and pause time (F03). When the Start Cleaning threshold is exceeded, the solenoid valves are automatically activated in sequence. If the dp threshold drops below 15% at the end of an entire cycle of pulses of the connected solenoid valves, the washing is suspended until pressure returns to a value above the Start Cleaning dp value. If the dp value does not drop below 15% of the Start Cleaning threshold, the frequency of the time is automatically reduced in proportion with each entire cycle of pulses of the connected solenoid valves, until a minimum cycle time between solenoid valves reaches 10 seconds. The minimum threshold of 10 seconds has been chosen in order not to hamper the dispensing of air by the compressor connected to the filter.

Cleaning function with fan off (PCC)

This function allows to carry out one or more cleaning cycles (the number of cycles is defined by F13) when the fan is off.The on or off state of the fan may be determined by the state of contacts 12-13 (contacts open = fan off). If F11=0, or may be determined automatically (with F11=1) when the dp pressure drops under the threshold defined in F12.The pulse time of the valves will always be that defined in F02, while the pause time in this case is defined in F14.
The display alternatively showes the number of the valve activated and the word ”PCC”.

Number of output selection

The number of outputs (solenoid valves), on which the sequencer will run the cleaning cycle, can be selected. Cleaning will be carried out in order from the first to last solenoid valve. The valves can be adjusted by the F04 function.

dp 0 calibration (F07)

This function is used to reset dp reading with the fan off. Increase or decrease the value shown by pressing + and - as required. This value will be subtracted from the value read by the dp sensor.

dp sensor self-calibration

This function allows to reset dp reading with the fan off automatically.
Hold SET and OK at the same time with the device off.
The message CAL will appear after the start-up test.
Release the buttons. The unit will go back to normal state after a few instants.
Automatic calibration is complete.

Fuse
Fuses can be replaced with selected Amp consumption:
3A = 24Vdc / ac

List of Functions

F01: Activation time.
Possible values:
0 - Manual (Δp excluded)
1 - Automatic (Default)(Δp included)
2 - Automatic with forced cycle (Δp included)
3 - Proportional (Δp included)

F02: Activation time.
Possible values: 0.05 - 5.00. Step 0.01
Default = 0.20

F03: Pause time.
Possible values: 001 - 999. Step 1
Default = 020

F04: Number of valves.
Possible values: 01 - 16. Step 1
Default = Dependant on filter size

F05: Output voltage.
Possible values: d24 / a24 /115 / 230
Default = a24

F06: Manual cleaning cycles.
Possible values: 1 the number of valves specified in F04.

F07: Zero dp threshold.
Possible values: 0.00 kPa -3.99 kPa. Step 0.01
Default = 0.00 kPa

F08: Cleaning cycle start threshold.
Possible values: 0.00 kPa - 3.99 kPa. Step 0.01
Default = 0.40 kPa

F09: Cleaning cycle stop threshold.
Possible values: 0.00 kPa - 3.99 kPa. Step 0.01
Default = 0.24 kPa

F10: Max DP Alarm Threshold. (Filter Clogging)
Possible values: 0.00 kPa - 3.99 kPa. Step 0.01
Default = 3.00 kPa

F11: Fan on recognition mode.
Possible value: 0 = fan input
Possible value: 1 = pressure
Default = 0

F12: dp threshold for fan on recognition if F11=1.
Possible values: 0.00 kPa - 3.99 kPa. Step 0.01
Default = 0.10 kPa

F13: Cleaning cycles after fan stop.
Possible values: 01 - 99. Step 1
Default = 01

F14: Pause time betwen cleaning cycles after fan stop.
Possible values: 001 - 999. Step 1
Default = 10

F15: Service timer.
Possible values: 001 - 999. Step 1. (1=10 h)
Default = 100 (1000 h)

F16: Service alarm.
Possible values: 0 (disabled) -1 (enabled).
Default = 0 (disabled)

F17: Reset service timer.
Possible values: 0 (disabled) -1 (reset).
Default= 0 (disabled).

Note: The service timer will be reset and the **F17** will be reset to 0 by setting **F17** to 1.

F18: Precoating function enabling.
Possible values: 0 = (disabled) 1 = (enabled)
Default = 0 = (disabled)

F19: dp threshold for precoating function.
Possible values: 0.00 kPa - 3.99 kPa. Step 0.01
Default = 2.00 kPa

F20: Enabling Minimum DP Alarm function.
Possible values: 0 (disabled) 1 = (enabled)
Default = 0 (disabled)

F21: Min. DP Alarm Threshold (Broken Sleeve/Cartridge).
Possible values: 0.00 kPa - 3.99 kPa. Step 0.01
Default = 0.20 kPa

F22: Forced Cleaning Cycle (Available only in funktion mode F01 = 2).
Possible values: 1 h - 999 h. Step (1 h)
Default = 4 h

Alarms
The unit runs a number af checks during the start-up cycle and during normal operation.
The possible alarms and respective solutions are shown in the following table.

Alarm	Description	Action
E01	F05 set to 24Vdc - ac jumper detected	**24Vdc,** switch the device off and move the ac/dc jumpers to dc. **24Vac,** Press OK, then press SET, set the function F05 using +/-, select A24 and press OK to confirm.
E02	F05 set to 24Vac - dc jumper detected	**24Vac,** switch the device off and move the ac/dc jumpers to ac. **24Vdc,** Press OK, then press SET, set the function F05 using +/-, select d24 and press OK to confirm.
E03	F05 set to 24Vac or dc. Voltage out of range detected.	**24V valves**, Switch the device off and move the output voltage selection jumper to 24V. **If the jumper is in the correct position,** press OK then SET, select the F05 function with +/- set the correct current and press OK
E04	F05 set to 115V eller dc. Voltage out of range detected.	**115V valves,** switch the device off and move the output voltage selection jumper to 115V. **If the jumper is in the correct position,** press OK then SET, select the F05 function with +/- set correct current and press OK
E05	F05 set to 230 V. Voltage out of range detected.	**230V valves**, switch the device off and move the output voltage selection jumper to 230V. **If the jumper is in the correct position,** press OK then SET, select the F05 function with +/- set correct current and press OK
E06	Solenoid valve current lower than minimum threshold or disconnected solenoid valve.	Check correct connection of the solenoid valve and respective data. The alarm is self-reset.
E07	Solenoid valve current higher than maximum threshold.	Check correct connection of the solenoid valve and respective data. The alarm is self-reset.
E08	Output short circuit. **Alarm cannot be reset**	Switch the device on and back on after having checked the solenoid valve system.
E09	dp maximum pressure exceeded (F10)	Check state of filtering elements.
E10	dp sensor hardware offset out of range	The self-calibration of the dp sensor has determined that a value is out of range. Disconnect the air tubes and repeat the function. Take the device to be serviced if the alarm occurs again.
E11	Maintenance deadline reached	Carry out maintenance
E12	dp sensor full-scale value reached	Check state of filtering elements. **Important:** Running in this condition may damage the device.
E13	Minimum DP alarm value ranging from F12 to F21 (Warning: The alarm is generated with a fixed delay af 60 seconds)	Check the status of the filtering elements.

6.2 Parallel coupling of filters

For air volumes greater than what one module can handle, the GFX2 filters must be connected in parallel.

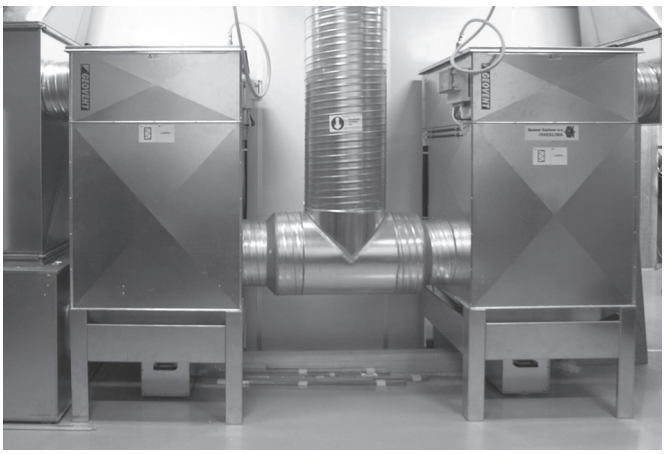

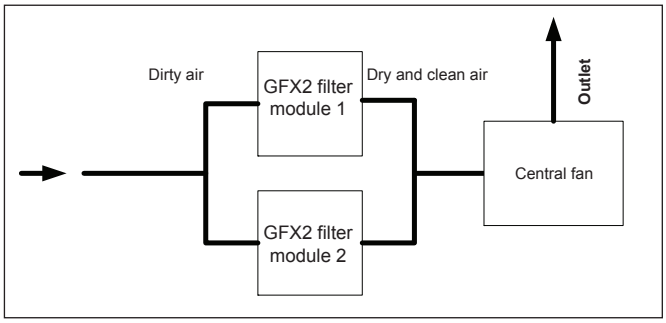

6.3 When the product has been installed

When assembly of the filter is complete, installed correctly and ready for use, there will not be any interaction between the user and the filter besides emptying the bucket. Naturally, the user should be aware of whether there is correct suction in the exhaust system. See chapter 7.3.

When filtering processes where the filter media is exposed to heavy load, it may be necessary to use prekote. Prekote is a granule that is added to the filter and increases the life of the filter media.
See separate instructions on this or contact Geovent for more information.

IMPORTANT: It is imperative that the cleaning cycle intervals are adjusted according to the load put on the filter.
First when installing and secondly after a period where it is evaluated if the intervals between cleaning shots should be shorter or longer.
If the shots are fired too often, the energy cost will be higher.
Are the shots fired too seldom there will be more strain on the fan making fitration more costly and ineffective and it will shorten the lifespan of the filter cartridges.

7.0 Control, test and maintenance

7.1 Control

Before usage, check that the cleansing intervals are adjusted to the purpose.
Make sure that the pause intervals are adjusted to the load and adjust if necessary. (See Chapter 6.0)

Check for vibration or noise issues during use of the product. Check that the entire system is completely sealed. In case of squeaking sounds, locate leakage and seal with joint filler.

We recommend checking the ventilation system to ensure, that it is delivering the amount of air which the system is proportioned for. Measure the amount of air and regulate using the regulation valve. In the event of overcapacity, the power usage can exceed the capacity of the fan motor, thereby causing the motor to burn out. See the manual of the fan.

Check if any marking on the product is damaged or difficult to read. In that case it must be replaced without delay.

Check if the alarm is weak or defect. In that case it must be repaired or exchanged immediately.

7.2 Maintenance

Check if the alarm is weak or defect. In that case it must be repaired or exchanged immediately. Never use the product with defective signalers.

The entire point extraction system should be looked after at least once a year by a qualified service engineer.

Periodic maintenance:
- Annually, all electrical parts should be checked.
- Make sure that the compressed air supply is clean and dry so that filter cartridges and shot valves are not damaged by condensation.
- Check the pressure loss over the filter and replace filter cartridges if this exceeds 2000 Pa.
- Check the filter clean side for dust particles at regular intervals and replace filter cartridges in case of leaks
- Check if any marking on the product is damaged or difficult to read. In that case it must be replaced immediately.
- Check if the alarm is weak or defect. In that case it must be repaired or exchanged immediately.

Before starting maintenance work on the product, ensure that the pneumatics of the machine are disconnected and aerated, as well as supply separators for all electrical equipment must be switched off (the voltage disconnected). Switches which are switched off shall be
marked with a sign showing contact details and the text
”Must not be operated - work is carried out on the facility.”

If you will need to open the doors of the filter unit this must be obtained:

1. Before removing the filter door, it is important that the service technician wears the necessary personal safety measures, such as breathing protection, protective gloves and goggles, and antistatic clothing that complies with the Working Environment Authority's rules for working with contaminated dust.

2. Before servicing the product, a cleaning cycle must be run and subsequently, the service man must wait for the dust to fall into the bucket, before the doors are opened.

3. Before starting maintenance work on the product, ensure that the pneumatics of the machine are disconnected and aerated, as well as supply separators for all electrical equipment must be switched off (the voltage disconnected) Switches which are switched off shall be marked with a sign showing contact details and the text "**must not be operated - work is carried out on the facility**."

4. Before opening the filter door, ensure that there is no ignition source in the vicinity of the machine.

Emptying of collection bucket

Emptying the collection bucket should be done when it is about 2/3 full, otherwise, it may further strain the filter cartridge. The contents of the bucket must then be properly destroyed in accordance with the applicable rules.

"When servicing the product, such as emptying the collection bucket and replacing filter media, breathing protection, protective gloves and goggles, antistatic clothing and waste sets MUST be used."

1. Pull the handle up.

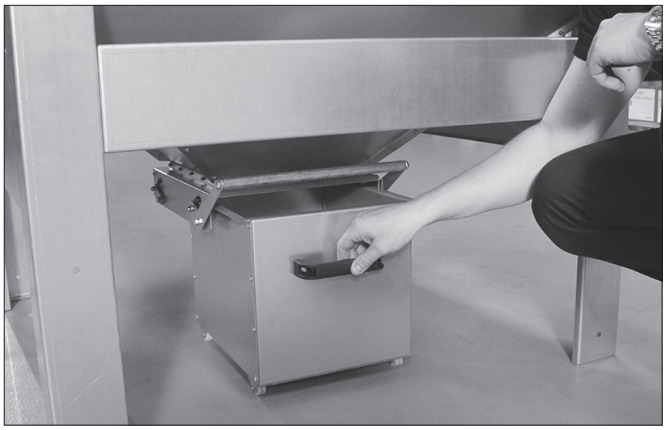

2. Pull/roll out the bucket and empty

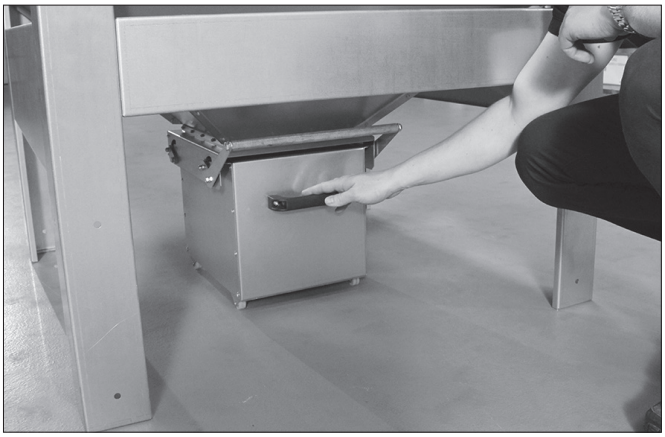

3. Roll bucket in and push handle down while holding bucket in place.

Open and close the door

1. Loosen the bolts, turn the latch 90° to the left.

2.The door opens (the filter cartridge can be replaced).

3. Close the door again, while holding it in place.

4. Turn the latch 90° to the right, while holding the door in place.

5. Tighten the bolts until the latch is tightly secured to the doors.

Security check:

1. Check that all 4 locks are tightened so they cannot be loosened by hand.

2. Pull the handle slightly to make sure it is closed tightly.

After any repair, maintenance, etc., compensatory connections for the discharge of static electricity must be refitted correctly.

7.3 Replacing the filter cartridges

The filter cartridge should be replaced after approximately 4000-8000 hours of operation or max. 4 years. This depends partly on the load on the filter and partly what it is used for.

Approach:

1. Before removing the filter door, it is important that the service technician wears the necessary personal safety measures, such as breathing protection, protective gloves and goggles, and antistatic clothing that complies with the Working Environment Authority's rules for working with contaminated dust.

2. Before servicing the product, a cleaning cycle must be run and subsequently, the service man must wait for the dust to fall into the bucket, before the doors are opened.

3. Before starting maintenance work on the product, ensure that the pneumatics of the machine are disconnected and aerated, as well as supply separators for all electrical equipment must be switched off (the voltage disconnected). Switches which are switched off shall be marked with a sign showing contact details and the text **"must not be operated - work is carried out on the facility."**

4. Before opening the filter door, ensure that there is no ignition source in the vicinity of the machine.

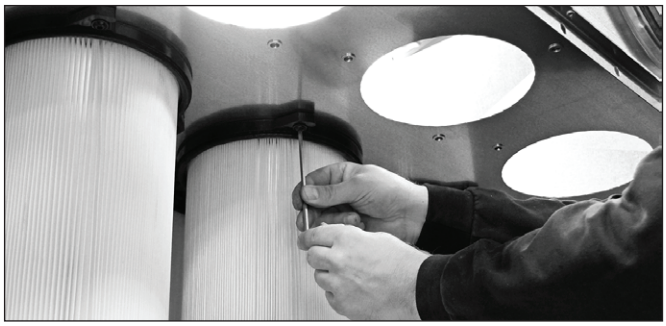

5. Loosen all screws holding the filter cartridge.

6. Turn the filter to remove it.

7. Place the contaminated filter in a plastic bag and dispose it according to rules for hazardous waste.

8. Mount the clean filter cartridge by repeating the above steps in reverse order.

9. Check the filter for functionality and leakage before use.

How do you optimize your filter?

1. Choose the correct filter cartridges for the job
2. Clean using correct air pressure
3. Correct injection sequence setting
4. Daily addition of Prekote
5. Ensure that the filter cartridges is dry
6. Shut down cleaning

After any repair, maintenance, etc., compensatory connections for the discharge of static electricity must be refitted correctly.

8.0 Cleaning

The outside of the product is cleaned by means of a vacuum cleaner or a damp cloth.

NOTE: Do not clean the product during operation. Turn the product off before cleaning.

The filter self-cleans automatically as a compressed air pulse is sent down through the filter cartridges, causing the particles on the textile of the filter to be blown off and collected in the bucket below.

NOTE: Do not open the doors during operation to avoid injury.

Cleaning of the inside of the product is not recommended.

If cleaning inside the product is done anyway, before removing the filter door, it is important that the service technician wears the necessary personal safety measures, such as breathing protection, protective gloves and goggles, and antistatic clothing that complies with the Working Environment Authority's rules for working with contaminated dust.

Before servicing the product, a cleaning cycle must be run and subsequently, the service man must wait for the dust to fall into the bucket, before the doors are opened.

Before cleaning of the product, ensure that the pneumatics of the machine are disconnected and aerated, as well as supply separators for all electrical equipment must be switched off (the voltage disconnected). Switches which are switched off shall be marked with a sign showing contact details and the text **"must not be operated - work is carried out on the facility."**

And the filter media inside the filter unit must be emptied before cleaning is started.
Before opening the filter door, ensure that there is no ignition source in the vicinity of the machine.

9.0 Troubleshooting

In the event of problems caused by increased pressure loss, low amounts of air etc., go through the following points:

When overloading the parts of the product, the operator must inspect the entire product for defects before re-starting.

Dust proceeds to come out of the inlets
The cleaning system is having to "blow" too much dust off the cartridges at one time and the dust is seeping into the tubes. Reduce the pause interval on the filter control until the dust no longer comes out through the inlets.

Pressure loss increases quickly during use and air level falls accordingly
The cleaning system cannot keep up with the dust level.
- Reduce the pause interval until the pressure loss is normal again. If this fails, the filter cartridge must be changed.
- Increase cleaning pressure (to a maximum of 6 bar, as the filter cartridges could otherwise be damaged).
- Increase after-cleaning.

Dirty filter alarm
Either the filter cartridge is torn or needs to be replaced immediately (pressure differential is too low) or the filter cartridges are nearing the end of their lifecycle, and need to be replaced (pressure differential too high).

After any repair, maintenance, etc., compensatory connections for the discharge of static electricity must be refitted correctly.

Filter media and their use (Indicative)

Application	15-335	15-480 FL	15-108 Dustbox	15-482	03-260 HVU	03-259 HVU	03-260 HVU-it	15-480A	15-481 FL
Oil mist	X								X
Dry welding smoke									X
Oil saturated welding smoke									P*
Foundry									X
Zink					X	X	X		
Powder coating		X						X	
Plasma / lazer cutting				P*					
Sandblasting / Sand		X							
Sandblasting / Glass								M*	
Sandblasting / enamel, steel, aluminium					X	X	X		
Grinding			X		X	X	X		X
Unspecified dust - no smoke		X							
Milk powder									X
Spice								A*	
Tobacco								X	
Paper								X	
Chalk									X
Cement									X
Saw dust								A*	
	*Notes: P = Prekote			M = Moisture resistant			A = ATEX approved		

10.0 Dismantling, disabling and scrapping

Deactive the product by disconnection the electrical mains. Dismantle the compressed air pipes and other tubes etc.

When you dispose of the product you should dismantle the filter elements as described in chapter 7.3.
It is very important that the instructions of this manual is followed in order to avoid contamination of people and the environment!

The inside of the product must be cleaned by means of a vacuum cleaner with a filter which suits the purpose.

Dismantle the electronics, wires and cables and put these into a suitable bag. Afterwards dispose of it according to local regulations.

Dismantle the metallic parts by unscrewing screws and bolts. Afterwards cut the larger pieces into smaller pieces and dispose of it according to local regulation.

BEWARE of sharp edges of the metallic parts which could harm persons etc.

The packing material must be sorted according to local regulation in order to be able to reuse the material.

11.0 Multi coupling Diagram

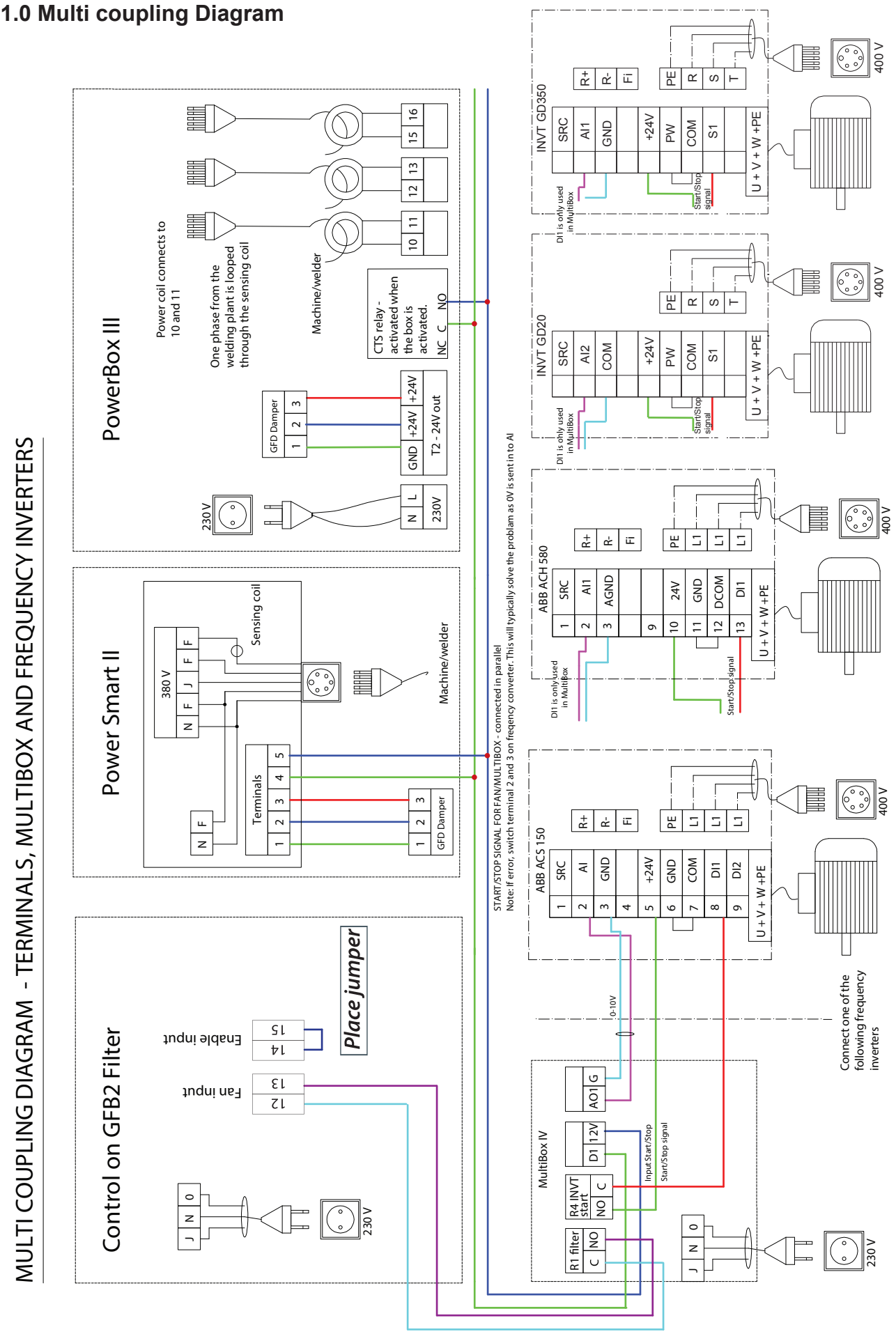

Dimensions
GFX2-3-1

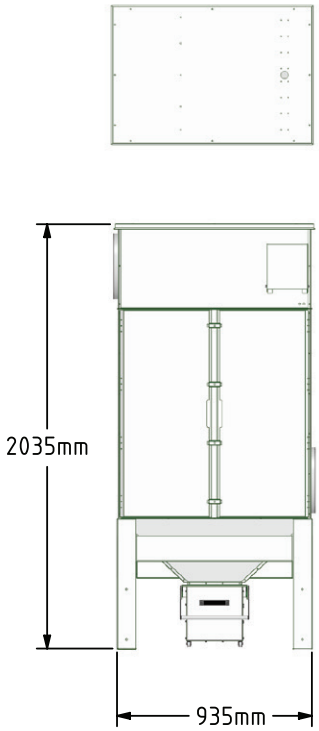

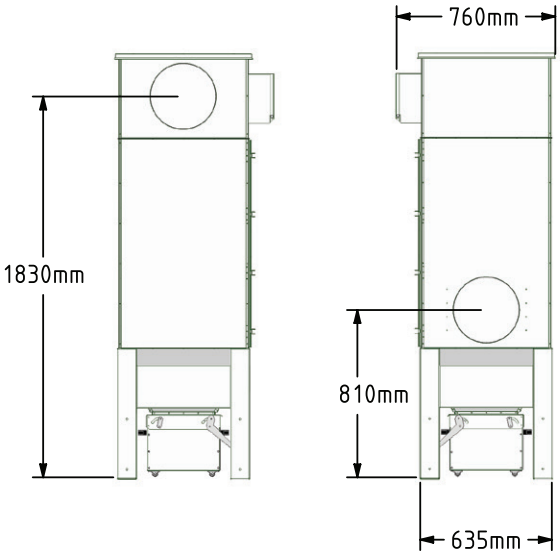

Dimensions
GFX2-6-2

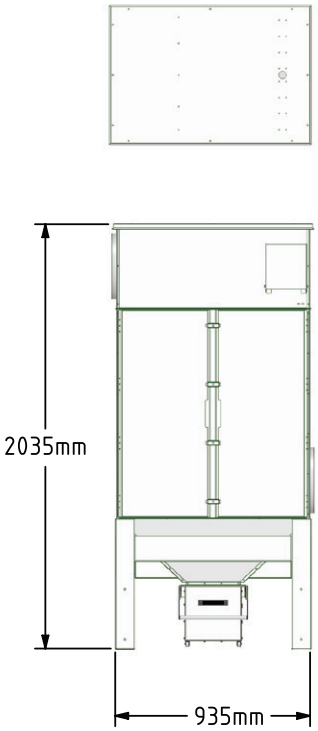

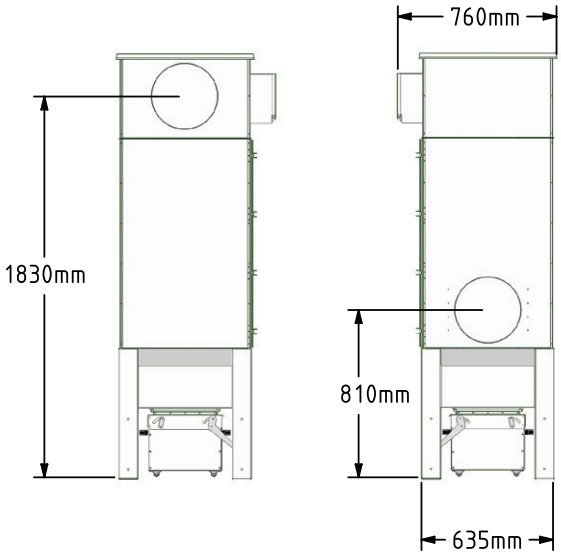

Dimensions
GFX2-9-3

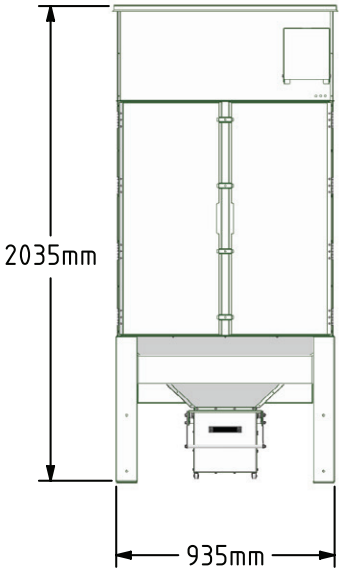

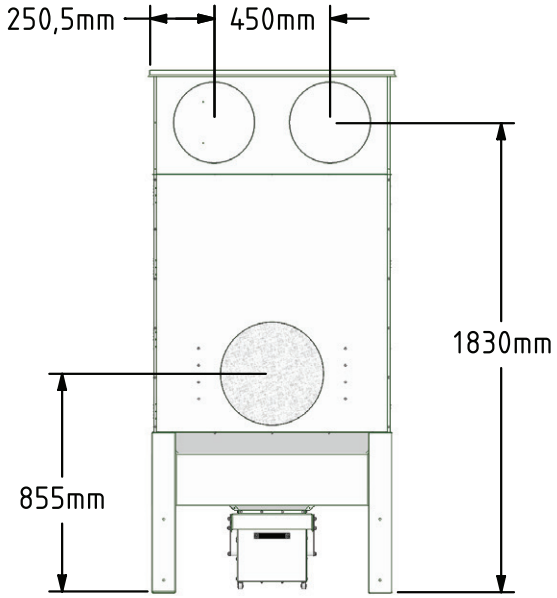

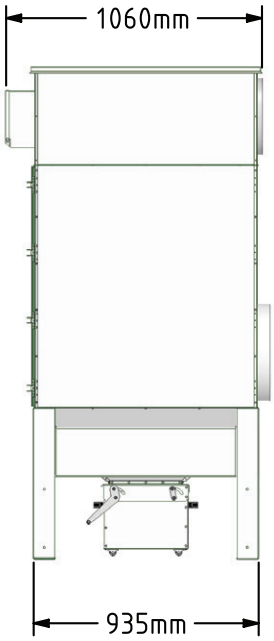

Dimensions
GFX2-12-4

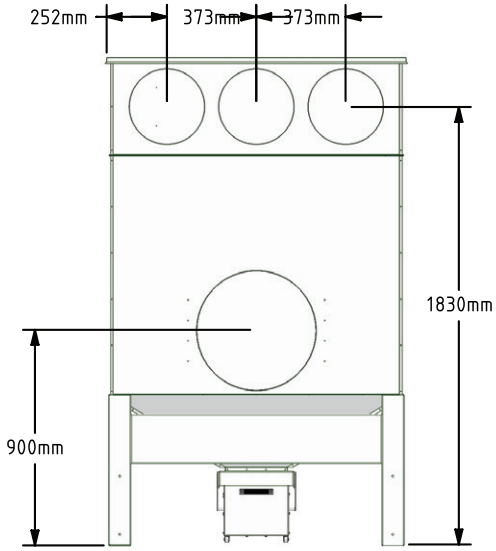

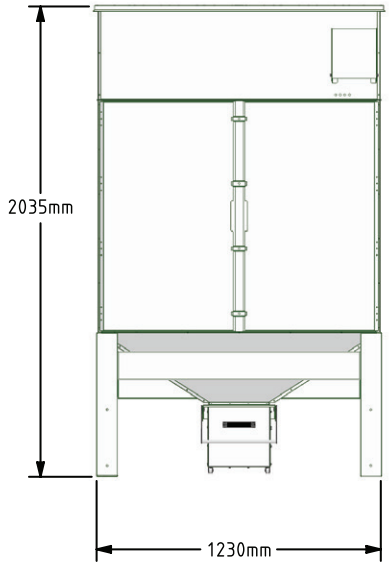

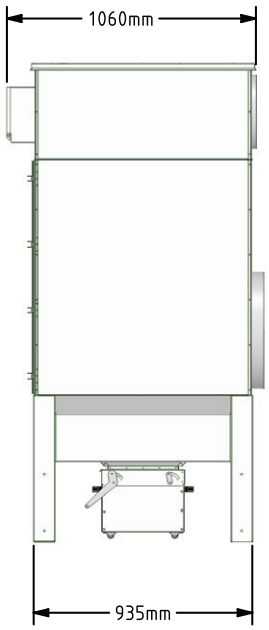

12.0 Liability

Warranty
Geovent A/S grants a warranty for products, which are defective, when it can be proved that the defects are due to poor manufacture or materials on the part of Geovent. The warranty comprises remedial action (reparation or exchange) until one year after the date of shipment.

No claims can be made against Geovent A/S in relation to loss of earnings or consequential loss as a result of defects on products from Geovent.

Wear on parts such as filter cartridges and hose is not included in the warranty.

User liability

In order for Geovent to be capable of granting the declared warranty, the user/fitter must follow this instruction manual in all respects.

Under no circumstances may the products be changed in any way, without prior written agreement with Geovent A/S.

Please refer to the current sales and delivery conditions at www.geovent.com

ATEX LABEL
with manufacturing data + Serial number

II 1/- D Ex h IIIC T65° Da

13.0 Declaration of conformity

The manufacturer: GEOVENT A/S
HOVEDGADEN 86
DK-8831 LØGSTRUP

hereby declares that:

Product: GFX2 filter
Model: GFX2-3-1, GFX2-6-2, GFX2-9-3, GFX2-12-4

complies with the relevant parts of the following directives and standards:

Directive 2006/42 / EC of the European Parliament and of the Council of 17 May 2006 on machines and amending directives 95/16 / EC

This declaration is no more valid if changes are made to the product by others than the manufacturer.

Authorized to collect the technical file:

Lise Cramer

Date: 22.03.2023

Position: Director
Name: Thomas Molsen

Signature: _____

14.0 Appendix

14.1 Spare parts list

Art. No.	Description
92-214	Timer control panel GFB2 (fitted as standard)
92-214B	Differential pressure control panel GFB2
93-VNP-208 ATEX	Membrane valve 24V ATEX
16-503	EX-Membrane
16-503S	Break sensor for explosions memb.

15-480AFL	FT/11 - 99.9% v/0.3µm ALUTEC (All-Round)

GEOVENT

HOVEDGADEN 86 • DK-8831 LØGSTRUP
(+45) 8664 2211 • salg@geovent.dk