GEOVENT

INSTRUCTION MANUAL

ATEX HIGH VACUUM UNIT

HVUX -3, -5, -7, -11 and -15

Version 1.0 24.01.17

www.geovent.com

GEOVENT HVU in ATEX execution

The GEOVENT HVUX is a High Vacuum Unit series, based on our standard “Non-ATEX” units called HVU. In most ways the units are identical, but the differences are highlighted in these first two pages, in regards to the risk assessment.

The HVUX can in the Atex series as standard not be classified for installation in zones with risk of explosion, Zone 21 and 22. This is due to the high vacuum pump. Upon request, the High vacuum pump can be supplied in an ATEX approved execution with ATEX certificate on the vacuum pump & control panel, but please note, that this is not standard in the HVUX series. The placement of HVUX is therefore in NON ATEX zone as standard.

On the interior side (dirty side of the filter), the standard HVUX can handle an explosive dust-filled atmosphere, zone 21 or 22. After the police filter and to the vacuum pump, it is classified as NON ATEX. The Vacuum pump has an extra protection, since the police filter insures the pump, in case of leakage in the main filter, why it can be classified as “Non ATEX”.

Plant Description
A HVUX, high vacuum unit consists of a container (cyclone) with explosion relief panel and safety switch (ATEX components), anti-static filter unit, compressed air cleaning system (ATEX component), police filter as leakage security (in case of leakage in main filter), side channel blower and control panel are as standard NON ATEX.

The HVUX are in each case customized to fit the specific task in the sense, that the control panel is customized and the explosion hatch is calculated from the actual dust KST value & Pmax given by the customer.

Construction
The Unit is constructed after the Directive 2014/30/EU, EN 13463-1 & 13463-5, Safe construction, in regards to elimination of source of ignition & those that cannot be eliminated, is made inactive.

Marking
Units, that are to be place within the EX area, will be CE- & Ex marked according to the respective placement zones.

Units, which has to handle explosive atmosphere internally is CE-marked and the EX-part is described in the manual.
There can be customers who require that the unit is internally marked for an EX-atmosphere & in those cases the unit will be marked based on the same requirements as the external marking.

ATEX certificates for the various ATEX components can be found in the back of this manual.

SAFETY REVIEW
According to EN 13463-1

Potential source of source				
Normal operation	**Expected unormal operation**	**Rarely abnormal operations**	**Applied precautions to prevent source of ignition from being effective**	**Applied protection against ignition**
Static electricity	Static electricity		Anti-static filter media, which is internal eliminated. Symmetry point on the device with the description in the manual.	DS/CLC/TR 50404
Electrical Components	Electrical Components		Electrical components are for the respective zone or better, both internally and externally.	Directiv 2014/30/EU
Mechanical Components	Mechanical Components		The units do not have any own source of ignition. The Vacuum pump is a standard pump, which is protected by a police filter for use in internal explosive atmosphere. When applied in an explosive atmosphere, the vacuum pump will be constructed for the actual zone.	 Directiv 98/37/EF Directive 2014/30/EU

Contents

1.0 General safety precautions

IMPORTANT – Please study all the instructions before mounting and commissioning.
Please keep these instructions in a safe place and instruct all users in the function and operation of the product.
Exchange of filter/maintenance should only be implemented after studying section 4 thoroughly.
Avoid the dismantling of any factory-mounted parts, since it impedes the commissioning of the equipment.
All electrical installations must be carried out by an authorised electrician.

1.1 Danger

This is an Atex unit, why ruls and regulations from Atex directive 2014/34/EU most be followed.

Dismantling parts on the HVU whilst in operation could be **deadly dangerous.**

Always disconnect the HVU from the mains, when mounting parts or servicing the Unit.

1.2 Area of application

The Geovent High Vacuum Unit - HVU - (of more than 20 kPa) is suitable for vacuum cleaning of cars during preparation, for the extraction of grinding dust, e.g. when carrying out bodywork or in combination with Energy Arms. The Unit is equipped with a two-step filter cyclone with an automatic/pneumatic cleaning system and has a filtration level of 99.9%.

The Unit may be used for the extraction of grinding dust from hand-held rotor grinders, stationary belt sanders and bench grinders, brake dust from cars and trucks as well as ordinary workspace cleaning, etc.

1.3 Technical data

Model HVUX	Output [kW]	Power consumption 100% load	Max air flow [m³/h]
HVU-3	3	6,8A	350
HVU-5	5,5	11,6A	550
HVU-7	7,5	15A	680
HVU-11	11	22A	1.180
HVU-15	15	31A	1.180

Model	Max. Vakuum [kPa]	Filter area [m²]	Filtration effect according to BIA-test
HVU-3	23	15	99,9%
HVU-5	21	15	99,9%
HVU-7	33	15	99,9%
HVU-11	22	15	99,9%
HVU-15	35	15	99,9%

Model	Sound pressure level according to ISO-3746-1979	Compressed air tank w/1” connection	Collection bucket
HVU-3	72 dBA	4 Liter	25 Liter
HVU-5	74 dBA	4 Liter	25 Liter
HVU-7	78 dBA	4 Liter	25 Liter
HVU-11	78 dBA	4 Liter	25 Liter
HVU-15	78 dBA	4 Liter	25 Liter

Model	Cabinet + cyclone ø700 mm	Corrosion class	Weight
HVU-3	Lacquer	II	205 kg
HVU-5	Lacquer	II	232 kg
HVU-7	Lacquer	II	261 kg
HVU-11	Lacquer	II	307 kg
HVU-15	Lacquer	II	328 kg

Temperature extracted air	**Max 150°C**
Temperature surroundings	**Max -10°C - +50°C**

Relative humidity must be	**<90%**

The sound level depends on several factors; For example where the High Vacuum Unit is placed (indoors/outdoors), the size of the room, the temperature of the surroundings, the acoustics and also the connection (hose><pipe) of the Unit has an effect on the sound level.

Graphs of pressure drop for the High Vacuum Unit

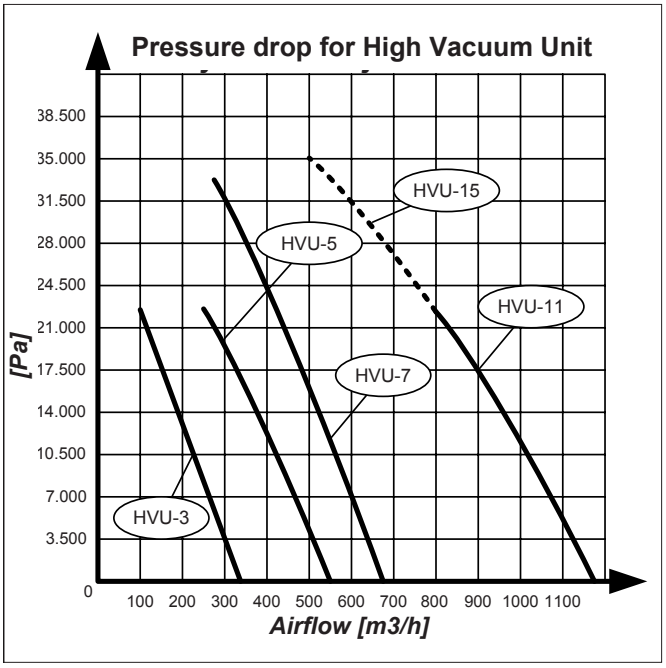

1.4 Construction

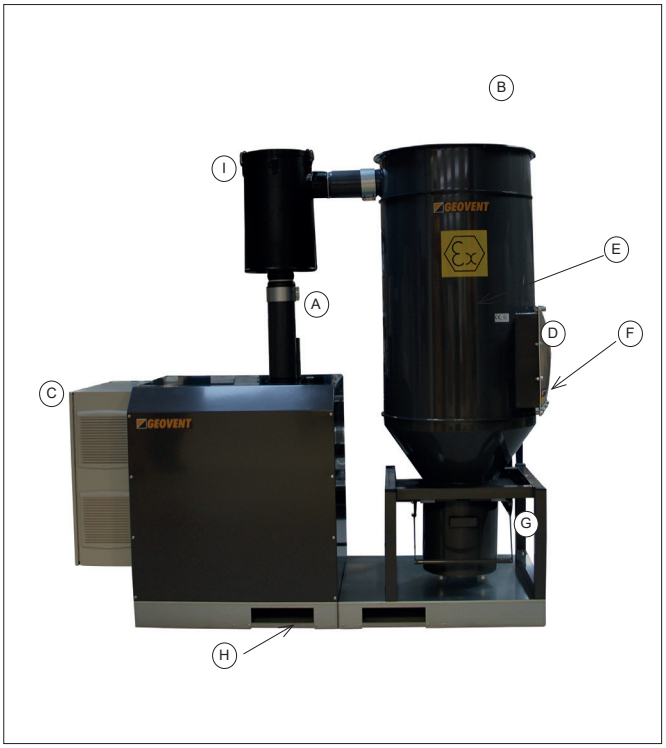

A Ø127mm Outlet
B Removable top
C Control panel with automatic start/stop and filter cleaning
D Ex - relief hatch
E Filter Cyclone - alu-coated polyester tissue - antistatic
F Ø127 mm inlet
G Collection bucket 25 litres
H Frame with holes for forklift truck
I Police filter - in case af lekage in mainfilter

Cover: Epoxy painted steel plate.

Filter medium: Spark proof aluminium-coated polyester filter AluTex® with a 99.9% filtration efficiency. Expected life for normal operation: 4,000-8,000 hours.

Engine/vacuum pump: IP-54 standard engine with by-pass fan in cast aluminium. Expected life for normal operation: 20,000 hours.

Automatics: Control panel of ABS-plastic IP-55.

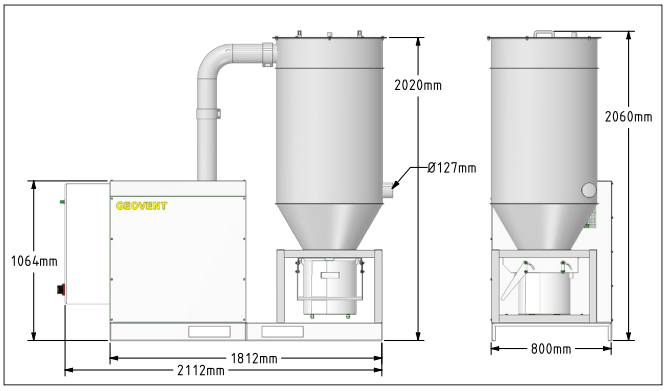

Table of dimensions

Type	HVU-3	HVU-5	HVU-7	HVU-11	HVU-15
øD	100	100	100	125	125
Weight	205 kg	232 kg	261 kg	307 kg	328 kg

2.0 Installation

The HVU should be installed indoors, for example in an engineering room with good ventilation in order to secure perfect operation. For outdoor installation, always place in an open shed as a minimum. THE SURFACE TREATMENT OF THE HVU IS NOT SUITABLE FOR OUTDOOR APPLICATION, SINCE THE RISK OF WATER PENETRATING THE CYCLONE IS INCREASED AND FURTHERMORE, THE ELECTRONICS COMPONENTS MAY NOT FUNCTION IN FROSTY WEATHER.

The HVU is supplied in complete/assembled condition and it has been pre-programmed, ready for connection to the mains.

Before mounting, please make sure that the optimum installation area is selected. Should it be placed indoors or outdoors? Is there space enough for the satisfactory installation and service of the HVU? What about optimum connection possibilities for piping and automatics? If at all possible, please avoid bends just before the inlet and after the outlet, since otherwise it could reduce the capacity of the HVU. For outdoor mounting, please take the following aspects into consideration: Any noise nuisance for the neighbours, defects due to frost and keep the engine out of heavy showers. Therefore, we recommend building a shed around the HVU in order to protect

it from the weather and to shield against noise.

Example: Below a noise cover has been built around the HVU and a protection roof against heavy showers.
The following installation should only be carried out by a trained fitter.
Atex Placement from GFX

Procedure:

1. The HVU is placed on a solid foundation (e.g. on a concrete floor), where there is no danger of vibration transmission. Also, please ensure that the filter can be exchanged (i.e. as a minimum a free height of 800 mm is required).

2. Connect the piping to the HVU. On the inlet side, the pipe may be fixed by means of a spring lock system. Remember to seal the connection with filler and/or tape!

3. In order to secure free mixing, the outlet should be taken two metres up above the roof top (up in the air) with an air velocity of 8 m/s as a minimum.

4. The whole plant/piping system should always be thoroughly checked for leaks, which should be sealed. The plant may not be taken into operation for 24 hours.

Connection of the fan to the mains:

5. The connection of the electric components of the HVU should only be carried out by an authorised electrician.

Connecting the compressed air:

1. Connect the clean and dry compressed air. There must be a pressure regulator. We recommend you to install a water separator just before the HVU.

2.1 Mounting of optional equipment

Mounting of frequency converter
It is possible for us to deliver with frequency converter and / or pressure control. See for external manual pressure control.

For setting options for external frequency converter, please refer to the supplied, separate manual.

Automatic start/stop
External start/stop (e.g. micro switch by the quick-action coupling/connection or on/off-button on the Energy Arm)
When the HVU is on manuel, there is a timer, which makes the HVU switch off automatically after 30 minutes.

2.2 Trial run – exact adjustment

When the installation has been completed, please check whether there is any vibration or noise nuisance from the HVU. Please control that the complete plant is totally tight. If any creaking noises are emitted, please locate the leakage and seal it with filler. Furthermore, we recommend checking whether the HVU supplies the volume of air, for which the equipment has been dimensioned. Measure the air volume and ensure that it does not exceed the amperage of the engine.

Vacuum safety valve

The vacuum safety valve is adjustment from factory. But must adjust subsequently when testing the unit.

Adjustment of the Vacuum safety valve
Adjusted so that the valve does not open valve normal running, but opens at blocking.

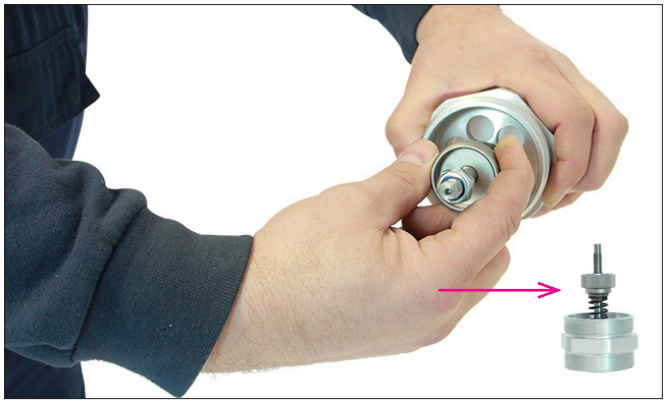

1. Adjust to loosen or tighten the spring.

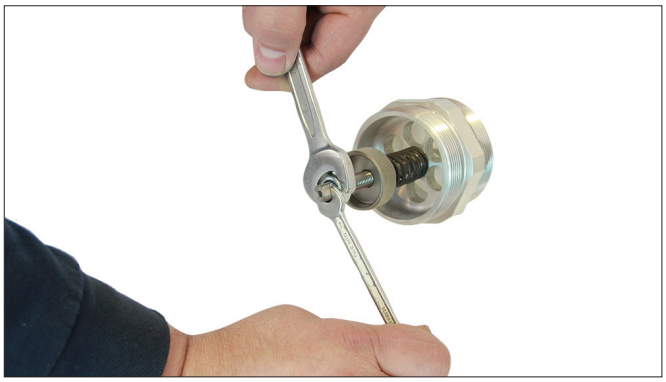

2. Then buckles to lock nut to secure the the spring position.

3.0 Application – user instruction

The HVU may not be in operation for longer periods of time (more than 20 min.) without opening the connections in the Channel Duct System, since otherwise the pump will overheat and break down. Optionally, use the built-in start/stop function.

4.0 Maintenance

At least once annually, the HVU and system should be overhauled by an authorised serviceman.

Periodic maintenance:
- Check filter, flow and usage.
- All electric parts should be checked annually.
- In principle, the vacuum pump/engine is maintenance-free due to the factory-mounted completely closed special ball bearings, which do not require any maintenance. Exchange of worn bearings should only be carried out by an electro-company.

4.1 Exchange of filter medium

The collection bucket should be emptied when approx. two thirds of it is full, since otherwise it may further load the filter medium. The filter medium should be exchanged after approx. 4,000-8,000 hours of operation or max. 4 years. Partly, this depends on the load on the filter, for example whether it has been used in connection with welding or grinding, etc.

Procedure:
1. Disconnect the Unit on the repair switch. Please ensure that the switch cannot be activated during the service operation.

2. Disconnect/dismantle the compressed air connection.

3. Before dismantling the dusty filter, it is important that the service technician is equipped with the necessary personal safety outfit, i.e. breathing mask and gloves, which comply with the rules of the Working Environment Service regarding work with polluted dust.

4. Subsequently, the collection bucket is dismantled by means of the fixed spring locks. Now, with care the bucket may be taken out. The contents of the bucket are now to be destroyed in an environmentally sound manner in accordance with the current rules.

5. The bucket is returned and fixed under the cyclone.

6. The top/lid of the cyclone is dismantled by uncoupling the spring lock, and then the lid with the compressed air tank is removed. Make sure first to disconnect the supply of compressed air and the power supply and not to damage the compressed air tank, when it is put aside.

7. Subsequently, with a 17 mm box spanner remove the three M10 bolts, which attach the filter medium to the Unit.

8. The polluted filter medium is carefully lifted up and placed in a large rubbish bag, which is then properly sealed up.

9. The new filter medium is inserted and fixed to the Unit with three 10 mm bolts.

10. The top/lid is carefully returned and fixed with a spring lock. (Remember to connect to power and compressed air again!).

11. Subsequently, the polluted filter medium is sent to destruction at the nearest waste disposal plant.

4.2 Trouble shooting

In case of problems with reduced pressure or volume of air, the points mentioned below may be followed when attempts are made to solve the problems:

The volume of air or the pressure has fallen to below the indicated volume/pressure.

- Wrong direction of rotation of the fan wheel. May be caused by wrong electrical installation. Please double check the direction of rotation. Change two phases.
- The channel system is not Air tight.
- Poor inlet/outlet options close to the vacuum pump may reduce the capacity (e.g. 90° bend just before the inlet).
- Damaged wheel.
- The rate of rotation has been set to a lower level.
- If the temperature deviates substantially from the laboratory measurements, where the temperature was 20°C with an atmospherical pressure of 101.4 kPa.
- The dampers have not been properly adjusted.
- The channel or the Unit has been blocked by a screwdriver, for instance.

Vibrations and noise.

- The foundation is not level/stable.
- Elements coming from outside have penetrated the Unit/channel system.
- Damaged wheel or engine.
- The wheel is loose.
- The wheel is running in the wrong direction.
- Loose bolts or screws.

The engine is overloaded.
- The cabling to the engine is wrong.
- Defective engine – please contact the distributor!

5.0 Liability

Warranty
Geovent A/S grants a warranty for products, which are defective; when it can be proved that the defects are due to poor manufacture or materials on the part of Geovent. The warranty comprises remedial action (reparation or exchange) until one year after date of shipment. No claims can be made against Geovent A/S in relation to loss of earnings or consequential loss as a result of defects on products from Geovent.

Wear parts like fan wheels etc. are not included in the warranty.

User liability
In order for Geovent to be capable of granting the declared warranty, the user/fitter must follow this Instruction Manual in all respects.

Under no circumstances may the products be changed in any way, without prior written agreement with Geovent A/S.

6.0 Declaration of conformity

GEOVENT

HOVEDGADEN 86 • DK-8831 LØGSTRUP
(+45) 8664 2211 • salg@geovent.dk

Hereby declares that:

The product: HVUX
Models: HVU-3, HVU-5, HVU-7, HVU-11 and HVU-15

have been manufactured in compliance with the directions of the

Directive Council of 2006/42/EF of 17. may 2006 regarding machines.

Directive 2014/34/EU of 26 of February concerning equipment and protective systems intended for use in potentially explosive atmospheres.

The following harmonized standards have been applied:

EN ISO 12100:2010 Safety of machinery – General principles for design – Risk assessment and risk reduction (ISO 12100:2010)

EN1227-1:2011; Explosive atmospheres – explosion prevention and protection – Part 1: Basic concepts & Methodology.

EN 13463-1 Non-electrical equipment for potentially explosive atmospheres. Basic method and requirements.

Date: 24/01-17

Position: Managing Director
Namn: Thomas Molsen

Underskrift :

CE

Installation Guide - Burst sensor

1. Unpack the burst sensor
2. Remove protective cap
3. Remove the outer nut
4. Install burst sensor on the bracket
5. Tighten the nuts
6. Attach the bracket on the explosion vent panel

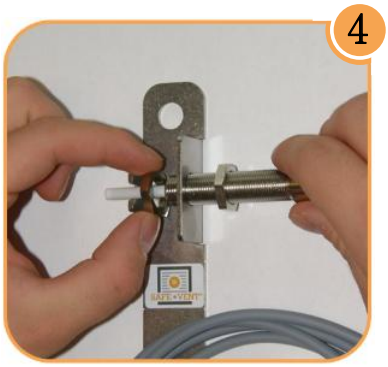

Appendix

TURBO™

Ex CE

EU Declaration of Conformity
according to Directive 2014/34/EU (Annex X)

The Manufacturer

TURBO S.r.l.
Via Po, 33/35
20811 Cesano Maderno (MB) – Italia

Declares that the equipment described in this Declaration has been submitted to the evaluation procedure concerning the "internal production control", (as per Annex VIII) and are in compliance with Directive 2014/34/EU for equipment and protective systems intended for use in potentially explosive atmospheres

Equipment description:

Coils for solenoid valves

Series: **BH10**
Size: **230 – 110 – 24V / 50-60Hz 19VA e 24VDC 18W**

Product Classification: **II 3 GD**, i.e. Equipment Group II (non-mining), Category 3 for Gas Zone 2, and Dust Zone 22

Marking:
Ex nA IIC T5
Ex tc IIIC T140°C

IP Degree of Protection: n.a. if the coil is not equipped with connector
Min. IP6X with proper connector mounted (see safety instructions ATEXturbo06-010)

Harmonised standards used:	
EN 60079-0:2012 +A11:2013	Explosive atmospheres Part 0: Equipment - General requirements
EN 60079-15:2010	Explosive atmospheres Part 15: Equipment protection by type of protection 'n'
EN 60079-31:2009	Explosive atmospheres Part 31: Equipment dust ignition protection by enclosure 't'

References to other technical standards, specifications and European Directives used:	
2014/30/EU	Electromagnetic Compatibility Directive (EMC)
2014/35/EU	Low Voltage Directive (LV)

Authorised Person for the Manufacturer within the European Community

Name and Surname: Fabrizio Messina — Position : General Manager

Signature: Messina Fabrizio — Date: April 20th 2016

Appendix

ATEXEN-R3-06_GB Re

EU Certificate of conformity
VIGIL'Ex Vent Panel

CUSTOMER

Customer :	SBK
Purchase Order Number :	006945-010 Qty : 1

PRODUCT SPECIFICATION

Type :	VIGIL'Ex VL	Serial number :	193170
Size :	410x410	Date of manufacturing :	28/2016
Material :	Stainless steel 1.4307 / EPDM	Manufactured quantity :	30
Marking :	Ex II GD		
Burst pressure unit :	100 mbar ±15% @22° C		

BURST TEST RESULTS

Tests made according EN14797:2006

Serial number tested :	193170	
Quantity tested :	4	
Test result :	(1) 97 mbar* - Mini : 85/ Maxi : 115	(4) 102 mbar* - Mini : 85/ Maxi : 115
	(2) 94 mbar* - Mini : 85/ Maxi : 115	(5) mbar* - Mini : 85/ Maxi : 115
	(3) 101 mbar* - Mini : 85/ Maxi : 115	(6) mbar* - Mini : 85/ Maxi : 115

*Tests realized in an ambient temperature included between 15° C and 25° C.

BUILDING MATERIALS

Component	Material	Material's certificate
- Panel :	Stainless steel 1.4307 (304L)	160601
- Gasket :	EPDM (black)	

PRODUCTION QUALITY INSURANCE INFORMATION

Notified body :	INERIS
Address :	Parc Technologique Alata BP 2 F-60550 Verneuil-en-Halatte
N° of notified body :	0080
N° of quality certificate :	INERIS 08ATEXQ406

production quality Insurance certificate according to instruction of appendix IV and VII of the ATEX directive

ATEX CERTIFICATION INFORMATION

Notified body :	INERIS
Address :	Parc Technologique Alata BP 2 F-60550 Verneuil-en-Halatte
N° of notified body :	0080
N° of quality certificate EC :	INERIS 15ATEX0001X
Technical file :	BE1257001-01/15
Harmonized norm :	EN14491 : 2012 / EN14994 :2007 / EN14797 : 2006
European ATEX directive :	94/9/EC (up to 19 April 2016) - 2014/34/EU (from 20 April 2016)

We certify that safety device covered by this data has been manufactured, inspected, tested and packaged in accordance with the purchase order requirements.
All guaranty documents of this conformity certificate are on file available for examination.

Jean-Marc FAURIE 19/10/2016
Products engineer

SOCIETE DE TOLERIE INDUSTRIELLE FRANÇAISE
S.A.S. au Capital de 800 000 €
Z.A. de la Lande - 49170 ST GEORGES SUR LOIRE
Tél. : 33 (0)2.41.72.16.80
SIRET 328 876 503 00025-RC Angers 84 B 12

Z.A. de la lande - 49170 Saint-Georges-sur-Loire - France
Siège social, achats et usine : tél.: +33 2 41 72 16 80 - Fax +33 2 41 72 16 85
Service commercial France Export : tél.: +33 2 41 72 16 82 - Fax +33 2 41 39 32 12
Email : sales@stifnet.com - Site internet : www.stifnet.com
SAS au capital de 800 000 € - R.C.S. Angers B 328 876 503 - 84B12 APE 2511Z - N° TVA FR 35 328 876 503

1/1

IBExU Institut für Sicherheitstechnik GmbH

An-Institut der TU Bergakademie Freiberg

[1] **1st Addition to**
EC-TYPE EXAMINATION CERTIFICATE IBExU05ATEX1035
according to Directive 94/9/EC, Annex III
(Translation of 25 July 2011)

[2] Equipment: **Burst sensor**
Type GMG 12000KX

[3] Manufacturer: SECATEC electronic GmbH

[4] Address: Knappenstraße 152
57581 Katzwinkel
Germany

[5] **Addition/Modification**
The burst sensor mentioned in [2] can be marked also according to the changed standards. The electrical input parameters are changed:

Maximum values in type of protection Ex ib IIC resp. Ex ib IIIC

$U_i \leq$ 40 V
$I_i \leq$ 57 mA
L_i, C_i negligible

[6] **Test report**
The proof of the explosion protection of the equipment mentioned in [2] is explained in the test report IB-10-3-092 of 19 April 2010. The test documents are part of the test report.

[7] **Test result**
IBExU certifies that the equipment mentioned in [2] has been found to comply with the essential health and safety requirements given in Annex II to the Directive 94/9/EC by compliance with EN 60079-0:2009 and E DIN IEC 60079-11:2008.
The equipment mentioned in [2] fulfils the requirements of the explosion protection for equipment of Group II, Category 2G respectively 2D in type of protection intrinsic safety.
The marking of the equipment shall include the following:

Ex II 2G Ex ib IIC T6 resp.

Ex II 2D Ex ib IIIC T80 °C IP6X

$-25\ °C \leq T_a \leq +80\ °C$

This addition is only valid in combination with the EC-Type Examination Certificate IBExU05ATEX1035 of 16 February 2005.

IBExU Institut für Sicherheitstechnik GmbH
Fuchsmühlenweg 7 - 09599 Freiberg, Germany
☎ +49 (0) 3731 3805-0 - 🖷 +49 (0) 3731 23650

Authorised for certifications
- Explosion protection -

By order

(Dr. Wagner)

- Seal-
(ID no. 0637)

Freiberg, 19 April 2010

Certificates without signature and seal are not valid.
Certificates may only be duplicated completely and unchanged.
In case of dispute, the German text shall prevail.

Appendix

DMT GmbH & Co. KG
Building Safety

Centre for fire and explosion protection

Tremoniastraße 13
44137 Dortmund
Telefon 0231-5333-0
Telefax 0231-5333-299

E-Mail: gs@dmt.de
http://www.dmt.de

Assessment Report on the electrostatic properties of the filter medium NA-909 ANFC regarding its use in potentially explosive atmospheres

Responsible:
Dipl.-Ing. Jens Hötger

20630729 GS-EX-Höt
Dortmund, 2012-06-20

DMT GmbH & Co. KG
Building Safety
Centre for fire and explosion protection

(Klose) (Hötger)

Appendix

DMT GmbH & Co. KG
Building Safety – Centre for fire and explosion protection
20630729 GS-EX-Höt
2012-06-20

TABLE OF CONTENTS **PAGE**

Appendix

DMT GmbH & Co. KG
Building Safety – Centre for fire and explosion protection
20630729 GS-EX-Höt
2012-06-20

1 Background

Nordic Air Filtration A/S is a manufacturer of filter systems which are used for separating dust even in atmospheres where potentially explosive mixtures of dust and air are present. NA-909ANFC is one of the materials used as a filter medium for the cartridge filters.

DMT GmbH & Co. KG was commissioned by Nordic Air Filtration to assess the electrostatic hazards of filter medium NA-909 ANFC when used in potentially explosive atmospheres.
The assessment is based on the electrostatic properties of the filter medium which were measured in our laboratory.

2 Legal requirements

If materials are used in potentially explosive atmospheres it has to be excluded that those materials can provide a source of ignition for such atmospheres. Filter media may be electrostatically charged by processes which accompany dust settlement and dust release; therefore, it has to be ensured that any charge stored will not be high enough to cause an ignition.
One measure to ensure that is the limitation of non-conductive surfaces; in addition, the use of conductive materials and materials with a discharge capacity, in combination with protection against earth of components made of those materials, has proven to be very effective.
Materials with a discharge capacity have to comply with the basic requirements of standards CLC/TR 50404 and DIN EN 13463-1. Thus the specific resistivity of the material has to be $< 10^9\ \Omega$ or the specific surface resistivity has to be $< 10^{10}\ \Omega$.
Conductive materials and materials with a discharge capacity have to be earthed safely in order to ensure the discharge process. However, the resistance to earth shall not exceed $10^6\ \Omega$.

3 Description of the specimen

The specimen submitted consists mainly of synthetic tissue and has two different sides.
The side facing the raw gas is coated with aluminium; the side facing the clean gas is made of uncoated plastic.

DMT GmbH & Co. KG
Building Safety – Centre for fire and explosion protection
20630729 GS-EX-Höt
2012-06-20

4 Measuring results

Property	Sample
Colour	white/metallic
Product name	NA-909 ANFC
Material thickness [mm]	< 1
Filter medium metal coating Resistance [Ω] (Measuring voltage 250 V)	$5*10^3$
Conductivity	conductive
Filter medium uncoated Resistance [Ω] (Measuring voltage 250 V)	$5*10^3$
Conductivity	conductive

The surface resistance was measured applying the criteria listed in the applicable standard (DIN EN 1149-1) and fully documented /U1/.
The room temperature was 24°C; the relative humidity during the measurements was 40 % rel. hum.
The sample is to be classified as **conductive** on both sides.

5 Conclusion

Filter medium NA-909 ANFC is conductive on both sides.
The filter medium has to be safely earthed via the conduction frame support of the filter cartridge in order to avoid charging of the filter material.

If the conditions for earthing mentioned above are complied with, there are no objections against the use of filter medium NA-909 ANFC in dust explosive atmospheres. Ignition hazards resulting from electrostatic charges are not to be expected if filter medium NA-909 ANFC is used.

6 Documents used for the assessment

This assessment report is based on the regulations /R/, descriptive documents /U/, and drawings /P/ listed below as well as relevant on-site inspections or discussions /B/ (if appropriate):

/R1/ CLC/TR 50404: Electrostatics - Code of practice for the avoidance of hazards due to static electricity. July 2003

/R2/ DIN EN 13463-1: Non-electrical equipment for potentially explosive atmospheres. Part 1: basic method and requirements. July 2009

/R3/ DIN IEC 60093: Methods of test for insulating materials for electrical purposes; volume resistivity and surface resistivity of solid electrical insulating materials. December 1993

/R4/ TRBS 2153: Vermeidung von Zündgefahren infolge elektrostatischer Aufladungen (Avoidance of ignition hazards resulting from electrostatic charging). April 2009

/U1/ Test Report 7248, Determination of the Surface resistance according of NA-909 ANFC; Wilhelm-Jost-Institut, Möhnesee, 19.06.2012 (see Annex)

Appendix

Wilhelm-Jost-Institut

Institute for applied physical-chemical Process- and Safety engineering

Research- and Test Laboratory of the INBUREX Consulting GmbH

INBUREX CONSULTING

Test Report

Determination of the Surface resistance according

of NA-909ANFC

for DMT GmbH & Co. KG,

Dortmund

Project-No. TL/7248/12

Möhnesee, 19 June 2012

INBUREX Consulting
Gesellschaft für
Explosionsschutz und
Anlagensicherheit mbH
August-Thyssen-Str. 1
D-59067 Hamm

Phone: +49 (0) 23 81 27 16 10
Fax: +49 (0) 23 81 27 16 20
E-mail: infos@inburex.com
Internet: www.inburex.com

Managing Directors:
Dr. Bernd Broeckmann
Sitz der Gesellschaft: Hamm
Amtsgericht Hamm HRB 1523

Commerzbank AG
(BLZ 410 400 18)
Konto 500 95 19

Deutsche Bank 24
(BLZ 410 700 24)
Konto 066 700 600

Volksbank Hamm e.G.
(BLZ 410 601 20)
Konto 302 820 100

VAT No:
DE 125 218 642

Appendix

Wilhelm-Jost-Institut

Institute for applied physical-chemical Process- and Safety engineering

Research- and Test Laboratory of the INBUREX Consulting GmbH

INBUREX CONSULTING

Determination of the Surface resistance according to DIN EN 1149-1 and VDE-0303 part 30

Test Report No.	TL/7248/12_OW01	**Classification**	Highly confidential
Sample	NA-909 ANFC	**Client**	DMT GmbH & Co. KG
Sample No.	7248/1		44137 Dortmund
Test No.	TL7248OW01	**Contact person**	Herr Jens Hötger

Test Methode

As measuring tool it was used a Teraohm-Meter from the company ELTEX. The surface resistance is the electrical resistance between two electrodes contacting the same surface of a material or object.
Materials or objects can be classified according to their surface resistance at test conditions of 23 °C and 50 % relative humidity as **conductive** ($\leq 10^4\,\Omega$), **electrostatically dissipative** ($10^5\,\Omega$ up to $10^9\,\Omega$) or **non conductive** ($>10^9\,\Omega$). Materials or objects can be classified according to their surface resistivity at test conditions of 23 °C and 30 % relative humidity as **conductive** ($\leq 10^4\,\Omega$), **electrostatically dissipative** ($10^5\,\Omega$ up to $10^{11}\,\Omega$) or **non conductive** ($>10^{11}\,\Omega$).

Remarks

The room temperature was 24°C, the relative humidity 40 %rF.

Results

Sample		Surface resistance [Ω] at 100V	Surface resistance [Ω] at **250V**
External side (metal coated)	1a	$< 2*10^5$	$5*10^3$
	1b	$< 2*10^5$	$5*10^3$
	1c	$< 2*10^5$	$5*10^3$
	1d	$< 2*10^5$	$5*10^3$
Internal side	1a	$< 2*10^5$	$5*10^3$
	1b	$< 2*10^5$	$5*10^3$
	1c	$< 2*10^5$	$5*10^3$
	1d	$< 2*10^5$	$5*10^3$

The external metal coated side of the sample can be classified as **conductive,** the internal non-metal coated side of the sample as **conductive.**

Place, Date

Möhnesee, 19 June 2012

Signatures

i.A. Ewa Müller
Laboratory Technician

INBUREX CONSULTING GmbH
August-Thyssen-Str. 1
59067 Hamm

i. V. Dipl.-Ing. M. Gosewinkel
Manager Test Laboratory

GEOVENT

HOVEDGADEN 86 • DK-8831 LØGSTRUP
(+45) 8664 2211 • salg@geovent.dk